NATIONAL COOPERATIVE HIGHWAY RESEARCH PROGRAM

NCHRP **SYNTHESIS 393**

Adjacent Precast Concrete Box Beam Bridges: Connection Details

A Synthesis of Highway Practice

CONSULTANT
HENRY G. RUSSELL
Henry G. Russell, Inc.
Glenview, Illinois

SUBJECT AREAS
Bridges, Other Structures, Hydraulics and Hydrology, and Maintenance

Research Sponsored by the American Association of State Highway and Transportation Officials
in Cooperation with the Federal Highway Administration

TRANSPORTATION RESEARCH BOARD

WASHINGTON, D.C.
2009
www.TRB.org

NATIONAL COOPERATIVE HIGHWAY RESEARCH PROGRAM

Systematic, well-designed research provides the most effective approach to the solution of many problems facing highway administrators and engineers. Often, highway problems are of local interest and can best be studied by highway departments individually or in cooperation with their state universities and others. However, the accelerating growth of highway transportation develops increasingly complex problems of wide interest to highway authorities. These problems are best studied through a coordinated program of cooperative research.

In recognition of these needs, the highway administrators of the American Association of State Highway and Transportation Officials initiated in 1962 an objective national highway research program employing modern scientific techniques. This program is supported on a continuing basis by funds from participating member states of the Association and it receives the full cooperation and support of the Federal Highway Administration, United States Department of Transportation.

The Transportation Research Board of the National Research Council was requested by the Association to administer the research program because of the Board's recognized objectivity and understanding of modern research practices. The Board is uniquely suited for this purpose as it maintains an extensive committee structure from which authorities on any highway transportation subject may be drawn; it possesses avenues of communication and cooperation with federal, state, and local governmental agencies, universities, and industry; its relationship to the National Research Council is an insurance of objectivity; it maintains a full-time research correlation staff of specialists in highway transportation matters to bring the findings of research directly to those who are in a position to use them.

The program is developed on the basis of research needs identified by chief administrators of the highway and transportation departments and by committees of AASHTO. Each year, specific areas of research needs to be included in the program are proposed to the National Research Council and the Board by the American Association of State Highway and Transportation Officials. Research projects to fulfill these needs are defined by the Board, and qualified research agencies are selected from those that have submitted proposals. Administration and surveillance of research contracts are the responsibilities of the National Research Council and the Transportation Research Board.

The needs for highway research are many, and the National Cooperative Highway Research Program can make significant contributions to the solution of highway transportation problems of mutual concern to many responsible groups. The program, however, is intended to complement rather than to substitute for or duplicate other highway research programs.

NOTE: The Transportation Research Board of the National Academies, the National Research Council, the Federal Highway Administration, the American Association of State Highway and Transportation Officials, and the individual states participating in the National Cooperative Highway Research Program do not endorse products or manufacturers. Trade or manufacturers' names appear herein solely because they are considered essential to the object of this report.

NCHRP SYNTHESIS 393

Project 20-5 (Topic 39-10)
ISSN 0547-5570
ISBN 978-0-309-098304
Library of Congress Control No. 2009900728

COPYRIGHT PERMISSION

Authors herein are responsible for the authenticity of their manuscripts and for obtaining written permissions from publishers or persons who own the copyright to any previously published or copyrighted material used herein.

Cooperative Research Programs (CRP) grants permission to reproduce material in this publication for classroom and not-for-profit purposes. Permission is given with the understanding that non of the material will be used to imply TRB, AASHTO, FAA, FHWA, FMSCA, FTA, or Transit development Corporation endorsement of a particular product, method, or practice. It is expected that those reproducing the material in this document for educational and not-for-profit uses will give appropriate acknowledgment of the source of any development or reproduced material. For other uses of the material, request permission from CRP.

NOTICE

The project that is the subject of this report was a part of the National Co-operative Highway Research Program conducted by the Transportation Research Board with the approval of the Governing Board of the National Research Council. Such approval reflects the Governing Board's judgment that the program concerned is of national importance and appropriate with respect to both the purposes and resources of the National Research Council.

The members of the technical committee selected to monitor this project and to review this report were chosen for recognized scholarly competence and with due consideration for the balance of disciplines appropriate to the project. The opinions and conclusions expressed or implied are those of the research agency that performed the research, and, while they have been accepted as appropriate by the technical committee, they are not necessarily those of the Transportation Research Board, the National Research Council, the American Association of State Highway and Transportation Officials, or the Federal Highway Administration of the U.S. Department of Transportation.

Each report is reviewed and accepted for publication by the technical committee according to procedures established and monitored by the Transportation Research Board Executive Committee and the Governing Board of the National Research Council.

Published reports of the

NATIONAL COOPERATIVE HIGHWAY RESEARCH PROGRAM

are available from:

Transportation Research Board
Business Office
500 Fifth Street, NW
Washington, DC 20001

and can be ordered through the Internet at:
http://www.national-academies.org/trb/bookstore

Printed in the United States of America

THE NATIONAL ACADEMIES

Advisers to the Nation on Science, Engineering, and Medicine

The **National Academy of Sciences** is a private, nonprofit, self-perpetuating society of distinguished scholars engaged in scientific and engineering research, dedicated to the furtherance of science and technology and to their use for the general welfare. On the authority of the charter granted to it by the Congress in 1863, the Academy has a mandate that requires it to advise the federal government on scientific and technical matters. Dr. Ralph J. Cicerone is president of the National Academy of Sciences.

The **National Academy of Engineering** was established in 1964, under the charter of the National Acad-emy of Sciences, as a parallel organization of outstanding engineers. It is autonomous in its administration and in the selection of its members, sharing with the National Academy of Sciences the responsibility for advising the federal government. The National Academy of Engineering also sponsors engineering programs aimed at meeting national needs, encourages education and research, and recognizes the superior achievements of engineers. Dr. Charles M. Vest is president of the National Academy of Engineering.

The **Institute of Medicine** was established in 1970 by the National Academy of Sciences to secure the services of eminent members of appropriate professions in the examination of policy matters pertaining to the health of the public. The Institute acts under the responsibility given to the National Academy of Sciences by its congressional charter to be an adviser to the federal government and, on its own initiative, to identify issues of medical care, research, and education. Dr. Harvey V. Fineberg is president of the Institute of Medicine.

The **National Research Council** was organized by the National Academy of Sciences in 1916 to associate the broad community of science and technology with the Academy's purposes of furthering knowledge and advising the federal government. Functioning in accordance with general policies determined by the Academy, the Council has become the principal operating agency of both the National Academy of Sciences and the National Academy of Engineering in providing services to the government, the public, and the scientific and engineering communities. The Council is administered jointly by both Academies and the Institute of Medicine. Dr. Ralph J. Cicerone and Dr. Charles M. Vest are chair and vice chair, respectively, of the National Research Council.

The **Transportation Research Board** is one of six major divisions of the National Research Council. The mission of the Transportation Research Board is to provide leadership in transportation innovation and progress through research and information exchange, conducted within a setting that is objective, interdisciplinary, and multimodal. The Board's varied activities annually engage about 7,000 engineers, scientists, and other transportation researchers and practitioners from the public and private sectors and academia, all of whom contribute their expertise in the public interest. The program is supported by state transportation departments, federal agencies including the component administrations of the U.S. Department of Transportation, and other organizations and individuals interested in the development of transportation. **www.TRB.org**

www.national-academies.org

NCHRP COMMITTEE FOR PROJECT 20-5

CHAIR

GARY D. TAYLOR, *CTE Engineers*

MEMBERS

KATHLEEN S. AMES, *Illinois DOT*
STUART D. ANDERSON, *Texas A&M University*
CYNTHIA J. BURBANK, *PB Americas, Inc.*
LISA FREESE, *Scoot County (MN) Public Works Division*
MALCOLM T. KERLEY, *Virginia DOT*
RICHARD D. LAND, *California DOT*
JAMES W. MARCH, *Federal Highway Administration*
MARK A. MAREK, *Texas DOT*
JOHN M. MASON, *JR., Auburn University*
ANANTH PRASAD, *HNTB Corporation*
ROBERT L. SACK, *New York State DOT*
FRANCINE SHAW-WHITSON, *Federal Highway Administration*
LARRY VELASQUEZ, *New Mexico DOT*

FHWA LIAISON

WILLIAM ZACCAGNINO

TRB LIAISON

STEPHEN F. MAHER

COOPERATIVE RESEARCH PROGRAMS STAFF

CHRISTOPHER W. JENKS, *Director, Cooperative Research Programs*
CRAWFORD F. JENCKS, *Deputy Director, Cooperative Research Programs*
NANDA SRINIVASAN, *Senior Program Officer*
EILEEN DELANEY, *Director of Publications*

NCHRP SYNTHESIS STAFF

STEPHEN R. GODWIN, *Director for Studies and Special Programs*
JON M. WILLIAMS, *Program Director, IDEA and Synthesis Studies*
GAIL STABA, *Senior Program Officer*
DONNA L. VLASAK, *Senior Program Officer*
DON TIPPMAN, *Editor*
CHERYL KEITH, *Senior Program Assistant*

TOPIC PANEL

DONALD W. HERBERT, *Pennsylvania Department of Transportation*
AHMED IBRAHIM, *California Department of Transportation*
STEPHEN F. MAHER, *Transportation Research Board*
BARNEY MARTIN, *Modjeski & Masters, Poughkeepsie, NY*
BASILE RABBAT, *Portland Cement Association*
ANDREA SCHOKKER, *Pennsylvania State University*
MICHAEL B. TWISS, *New York State Department of Transportation*
JULIUS F.J. VOLGYI, *JR., Virginia Department of Transportation*
BENJAMIN GRAYBEAL, *Federal Highway Administration (Liaison)*
GARY JAKOVICH, *Federal Highway Administration (Liaison)*

ACKNOWLEDGMENTS

I would like to thank the Virginia Department of Transportation for providing the drawings.

Cover figure: Washington Street Bridge, Dayton, Ohio, precast concrete box beam bridge.

FOREWORD

Highway administrators, engineers, and researchers often face problems for which information already exists, either in documented form or as undocumented experience and practice. This information may be fragmented, scattered, and unevaluated. As a consequence, full knowledge of what has been learned about a problem may not be brought to bear on its solution. Costly research findings may go unused, valuable experience may be overlooked, and due consideration may not be given to recommended practices for solving or alleviating the problem.

There is information on nearly every subject of concern to highway administrators and engineers. Much of it derives from research or from the work of practitioners faced with problems in their day-to-day work. To provide a systematic means for assembling and evaluating such useful information and to make it available to the entire highway community, the American Association of State Highway and Transportation Officials—through the mechanism of the National Cooperative Highway Research Program—authorized the Transportation Research Board to undertake a continuing study. This study, NCHRP Project 20-5, "Synthesis of Information Related to Highway Problems," searches out and synthesizes useful knowledge from all available sources and prepares concise, documented reports on specific topics. Reports from this endeavor constitute an NCHRP report series, *Synthesis of Highway Practice*.

This synthesis series reports on current knowledge and practice, in a compact format, without the detailed directions usually found in handbooks or design manuals. Each report in the series provides a compendium of the best knowledge available on those measures found to be the most successful in resolving specific problems.

PREFACE

By Jon M. Williams
Program Director
Transportation
Research Board

Bridges built with adjacent precast, prestressed concrete box beams are a popular and economical solution in many states because they can be constructed rapidly and most deck forming is eliminated. Bridges constructed with box beams have been in service for many years and have generally performed well. A recurring problem, however, is cracking in the longitudinal grouted joints between adjacent beams, resulting in reflective cracks forming in the wearing surface. This in turn may lead to leakage, corrosion, and, in severe cases, complete cracking of joints and loss of load transfer. This study discusses current design and construction practices that are reported to reduce the likelihood of longitudinal cracking in box beam bridges.

Information for the study was gathered through a literature review. In addition, state and Canadian provincial transportation agencies were surveyed, and the survey was augmented with selected individual interviews.

Henry G. Russell, Henry G. Russell, Inc., Glenview, Illinois, collected and synthesized the information and wrote the report. The members of the topic panel are acknowledged on the preceding page. This synthesis is an immediately useful document that records the practices that were acceptable within the limitations of the knowledge available at the time of its preparation. As progress in research and practice continues, new knowledge will be added to that now at hand.

CONTENTS

ADJACENT PRECAST CONCRETE BOX BEAM BRIDGES: CONNECTION DETAILS

SUMMARY

Bridges built with adjacent precast, prestressed concrete box beams were first introduced in the 1950s and are a common and economical solution in many states because they can be constructed rapidly and most deck forming is eliminated. Today, box beam bridges are used in about two-thirds of the states. Based on the survey conducted for this synthesis, the current practice for box beam bridges is as follows:

- Approximately half of the states with box beam bridges use AASHTO/PCI cross-sectional shapes.
- Span lengths range from less than 20 ft to more than 80 ft.
- The most common maximum skew angle between the abutment and the perpendicular to the bridge centerline is 30 degrees.
- Most states use simple spans with a cast-in-place concrete deck.
- Where a composite deck is used for continuous spans, the bridges are generally designed to be continuous for live load.
- Most longitudinal keyways between adjacent box beams are partial depth.
- The most common transverse tie consists of unbonded post-tensioned strands or bars.
- Approximately half the states grout the keyway before post-tensioning and approximately half after post-tensioning.
- There is no consensus about the number of transverse ties and the magnitude of post-tensioning force.
- Exterior and interior beams generally use the same design.
- Most bridges have either full-width support or two-point supports on each end.
- More states use plain elastomeric bearings than laminated elastomeric bearings.
- In single stage construction, all beams are generally connected transversely at one time.
- In two-stage construction, a variety of sequences is used.
- Approximately half the states require sandblasting of the keyway before erection. The sandblasting is always done before shipment.
- The most common grout used for the keyways is a nonshrink grout.
- Approximately half the states require the use of wet curing or curing compounds for the grout.

Respondents to the survey included 35 state departments of transportation, five Canadian provincial transportation agencies, three railroads, and 13 U.S. counties.

Bridges constructed using box beams have been in service for many years and have generally performed well. However, a recurring problem is cracking in the longitudinal grouted joints between adjacent beams, resulting in reflective cracks that form in the wearing surface, if present. The cracking appears to be either initiated by stresses associated with temperature gradients and then propagates as a result of live load, or is caused by a combination of stresses from temperature gradients and live load. In bridges with partial-depth keyways, the cracking may be initiated by tensile stresses caused by the post-tensioning. In most cases, the cracking leads to leakage, which allows chloride-laden water

to saturate the sides and bottoms of the beams. This eventually can cause corrosion of the non-prestressed reinforcement, prestressing strand, and transverse tie. In severe cases, the joints crack completely and load transfer is lost. Unless deterioration or leakage at the joint is evident from the underside of the bridge, there is no way to know easily the extent of deterioration at internal joints. Consequently, it is better to design and build box beam bridges so that cracking does not occur.

The following practices can reduce the likelihood of longitudinal cracking in box beam bridges:

- Design Practices
  - Requiring full-depth shear keys that can be grouted easily
  - Providing transverse post-tensioning so that tensile stresses do not occur across the joint
  - Requiring a cast-in-place, reinforced concrete, composite deck with a specified concrete compressive strength of 4,000 psi and a minimum thickness of 5 in., to limit the potential for longitudinal deck cracking

- Construction Practices
  - Using stay-in-place expanded polystyrene to form the voids
  - Sandblasting the longitudinal keyway surfaces of the box beams immediately before shipping to provide a better bonding surface for the grout
  - Cleaning the keyway surfaces with compressed air or water before erection of the beams to provide a better bonding surface for the grout
  - Grouting the keyways before transversely post-tensioning to ensure compression in the grout
  - Using a grout that provides a high bond strength to the box beam keyway surfaces to limit cracking
  - Providing proper curing for the grout to reduce shrinkage stresses and ensure proper strength development
  - Providing wet curing of the concrete deck for at least 7 days to reduce the potential for shrinkage cracking and to provide a durable surface

It is suggested that the following practices be avoided:

- Design Practices
  - Using nontensioned transverse ties, because they do not prevent cracking

- Construction Practices
  - Using an asphalt wearing surface unless a waterproofing membrane is used, because water accumulates below the asphalt
  - Using nonprepackaged products for grout in the keyways

This synthesis has identified the need for additional research related to the design, durability, and repair of adjacent box beam bridges. A research problem statement addressing research on the design issues is included.

CHAPTER ONE

INTRODUCTION

BACKGROUND

Bridges built with adjacent precast, prestressed concrete box beams are a common and economical solution in many states, because they can be constructed rapidly and deck forming is eliminated. The bridges may be single span as shown in Figure 1 or multiple spans as shown in Figure 2. They have proved to be economical for major river crossings, such as shown in Figure 3. Although this bridge resembles an arch, the superstructure consists of adjacent precast, prestressed concrete box beams.

FIGURE 1 Single-span box beam bridge over railroad (*Source:* New York State DOT).

FIGURE 2 Three span box beam bridge over a ravine (*Source:* Illinois DOT).

FIGURE 3 Adjacent box beam bridge to replicate an arch bridge (*Source:* Henry G. Russell).

There is a new thrust to use these bridges for rapid construction under the FHWA Highways for LIFE program. The purpose of this program is to advance **L**onger-lasting highway infrastructure using **I**nnovations to accomplish the **F**ast construction of **E**fficient and safe highways and bridges. An all-precast concrete bridge that used adjacent box beams for the superstructure and was constructed in 30 days is shown in Figure 4. According to recent National Bridge Inventory data, adjacent concrete box beam bridges constitute about one-sixth of the bridges built annually on public roads.

FIGURE 4 Adjacent box beams used for the superstructure of the Davis Narrows Bridge, Maine (*Source:* Maine DOT).

The box beams are generally connected by grout placed in a keyway between each of the units, and usually with transverse ties. Partial-depth or full-depth keyways are typically used, incorporating grouts using various mixes. Transverse ties, grouted or ungrouted, vary from a limited number of nontensioned threaded rods to several high-strength tendons post-tensioned in multiple stages. In some cases, no topping is applied to the structure, whereas in other cases, a noncomposite topping or a composite structural slab is added.

Bridges constructed using box beams have been in service for many years and generally have performed well. However, one recurring problem is cracking in the grouted joints between adjacent units, which results in reflective cracks forming in the wearing surface. In most cases, the cracking leads to leakage, which allows chloride-laden water to saturate the sides and bottom of the beams, eventually causing corrosion of the non-prestressed reinforcement, prestressing strand, and transverse ties. In severe cases, the joints crack completely and load transfer is lost.

There is no design method for shear keys in the AASHTO Standard Specifications for Highway Bridges or the AASHTO Load and Resistance Factor Design (LRFD) Bridge Design Specifications. Most shear-key details in use are regional “standard details” of uncertain origin, and there is no information on the magnitude of forces induced in the shear keys or on the ability of a given detail to resist these forces.

HISTORY

According to Miller et al. (1999), the use of prestressed concrete adjacent box beams started in about 1950 for bridges with span lengths of 30 to 100 ft, and these box beams are widely used today for these span lengths. The beam design evolved from an open channel design. Shear keys in the top flange were used to transfer the load between adjacent beams. When the load is transferred this way, torsion occurs in the section and, hence, a bottom flange is needed to convert the open section into a torsionally stiff closed section.

Macioce et al. (2007) reported that adjacent box beam bridges constructed of noncomposite prestressed concrete with an asphalt wearing surface were developed during the interstate construction period to provide a shallow superstructure, rapid uncomplicated construction, and low initial costs. In many circumstances, this bridge type was used on low-volume roads.

The history of adjacent box beam bridges in Michigan was described by Attanayake and Aktan (2008). Box beam bridges were first introduced in 1954 and consisted of either single-cell or double-cell units. The stirrups were open and did not extend to the bottom flange. The specified spacing between adjacent beams was 0.25 in. For spans up to 40 ft, a transverse tie rod was used at the center of the span. For span lengths greater than 40 ft, the tie rods were used at third points along the span. The ties were located at mid-depth of the box beam. The specified thickness of the asphalt wearing course was 3 in.

In subsequent years, Michigan made numerous design changes including deeper shear keys, wider beam spacings, use of closed instead of open stirrups, use of post-tensioning tendons for the transverse ties, replacement of cardboard void forms with polystyrene, additional transverse ties, different cross-sectional dimensions for the box beams, and the use of a 6-in.-thick composite reinforced concrete deck with a single layer of reinforcement.

Since the early use of box beams, many changes in prestressed concrete design and construction have contributed to changes in box beam details (Macioce et al. 2007). These changes include the following:

- Improved design criteria and design methods
- Higher concrete compressive strengths
- Lower permeability concretes
- Larger diameter strands
- Low-relaxation strands
- Epoxy-coated non-prestressed reinforcement
- Expanded polystyrene to form the voids
- Curing practices
- Thicker concrete cover

SCOPE

This synthesis documents the different types of grout key configurations, grouts, and transverse tie systems that currently are being used in the United States and Canada, and how each type has performed. The synthesis includes the following:

- Practices and details that have proven to enhance the performance of box beam bridges
- Practices and details to avoid
- Specific areas of interest, including the impact of the following:
  - Span range
  - Bridge skew
  - Bearing types
  - Topped and nontopped beams
  - Transverse tie details
  - Phased construction
  - Waterproofing membranes
  - Exterior beam details, including connections to the barrier and parapet
- Grout specifications

- Inspection practices
- Bridge maintenance, including rehabilitation and retrofitting techniques
- Sources of ongoing or completed analytical or experimental research pertaining to the design or construction of this type of bridge
- Design and construction issues that require further research and evaluation

This information was gathered from literature reviews and surveys of state highway agencies through the AASHTO Highway Subcommittee on Bridges and Structures; Canadian Provinces through the Transportation Association of Canada, Class 1 railroads; U.S. counties through the National Association of County Engineers; and industry through the Precast/Prestressed Concrete Institute (PCI). Some information on Japanese practice is included.

Fifty-eight complete responses were received, including 21 from owners who do not use adjacent box beam bridges. A follow-up was made with those states that did not respond to determine whether they used box beams. The usage by state highway agencies is illustrated in Figure 5. In subsequent chapters, the information from the survey is summarized as state responses and total survey responses. In some cases, the percentages total more than 100 because more than one answer was possible, and some states reported the use of multiple practices.

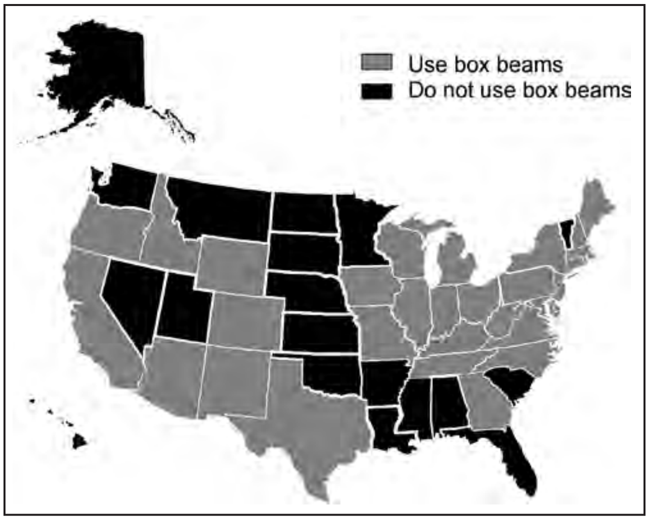

FIGURE 5 Usage of box beam bridges by state.

Information gathered in this synthesis provides a basis for understanding the behavior of adjacent concrete box beam bridges and will help establish the most practical and efficient details to reduce maintenance costs and extend bridge service life.

The remaining text of this synthesis is organized as follows:

- Chapter two identifies and discusses the items that are generally considered during the design stage. These include span lengths, skew angles, and beam cross sections; composite versus noncomposite design; keyway configurations; transverse tie details; design criteria for connections; and exterior beam details.
- Chapter three reviews information that is available in the AASHTO Specifications. Construction practices that affect keyway performance, such as bearing types, construction sequence, differential camber, keyway preparation, grouting materials, and grouting practices, are discussed.
- Chapter four identifies the types of observed distress, maintenance procedures, repair procedures, and factors affecting long-term performance.
- Chapter five identifies what inspection techniques, other than visual inspection, have been used.
- Chapter six summarizes relevant recent and ongoing research in materials technology and structural design.
- Chapter seven summarizes the best practices and details that have proven to enhance the performance of box beam bridges and reviews practices and details to avoid. Design and construction issues requiring further research are listed.

Appendixes provide the survey questionnaire (Appendix A), a summary of the responses to the questionnaire (Appendix B), beam and connection details (Appendix C), and the research problem statement (Appendix D).

CHAPTER TWO

STRUCTURAL DESIGN AND DETAILS

SPAN LENGTHS

In the survey conducted for this synthesis, respondents reported on the span lengths for which adjacent box beams were used. The results, shown in Figure 6 individually for the states and the total survey, indicate that adjacent box beams are used for span lengths ranging from less than 20 ft to more than 80 ft.

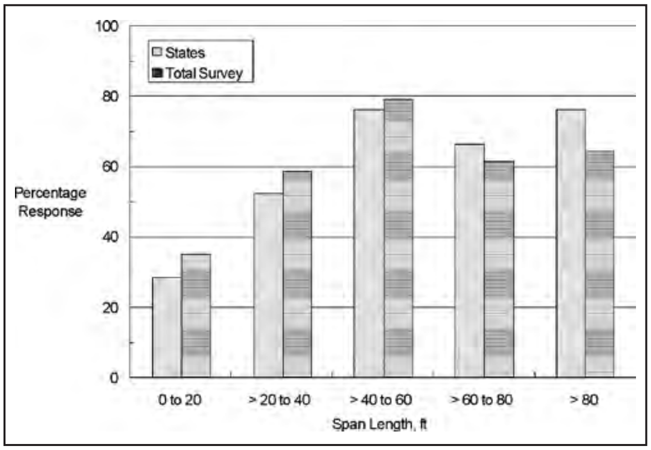

FIGURE 6 Survey results for span lengths.

The *PCI Bridge Design Manual* (PCI 1997/2004) includes preliminary design charts for AASHTO box beams with span lengths ranging from 40 to 140 ft.

SKEW ANGLES

The survey asked about the maximum skew angle used for box beam bridges. The skew angle of a bridge can be defined in two ways, as shown in Figure 7. Consequently, it was necessary to modify some of the responses based on each state's definition of skew angle. The responses are summarized in Figure 8 for the skew angle defined in Figure 7a. Some states indicated that they do allow exceptions to their normal maximum values.

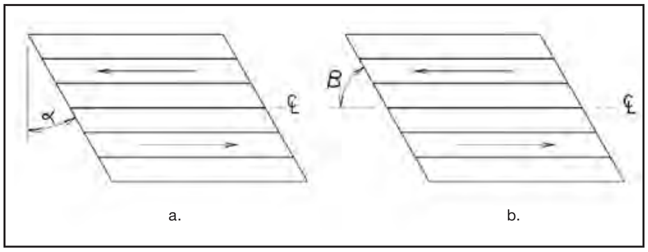

FIGURE 7 Definition of skew angle.

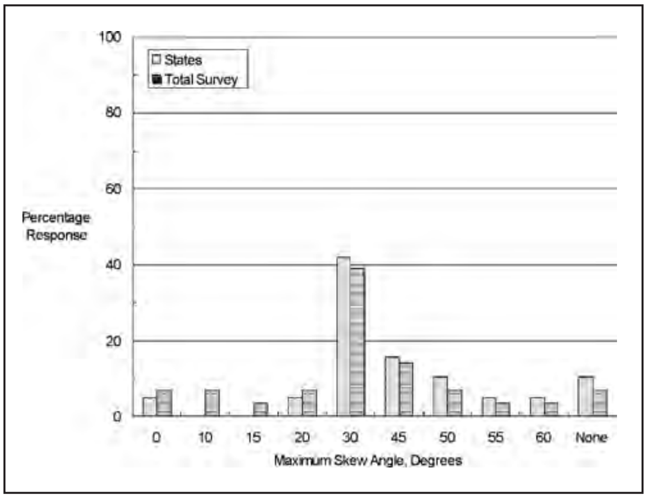

FIGURE 8 Survey responses for skew angles.

BEAM CROSS SECTIONS

In the survey conducted for this synthesis, 50% of the state respondents and 54% of the total respondents reported that they use AASHTO/PCI-shaped box beams. Approximately 30% use state standards and the remainder use other cross sections. The other cross sections used by respondents were reported as PCI Northeast and Canadian PCI standards. Drawings of the AASHTO/PCI cross sections are included in Appendix C.

COMPOSITE VERSUS NONCOMPOSITE DESIGNS

In the survey conducted for this synthesis, respondents identified the types of box beam superstructures that they build. The responses, shown in Figure 9, indicate that the type used by most respondents consists of simple spans with a cast-in-place concrete wearing surface. For all bridges with cast-in-place concrete wearing surfaces, the specified minimum thickness ranged from 4.5 to 6 in. for state agencies

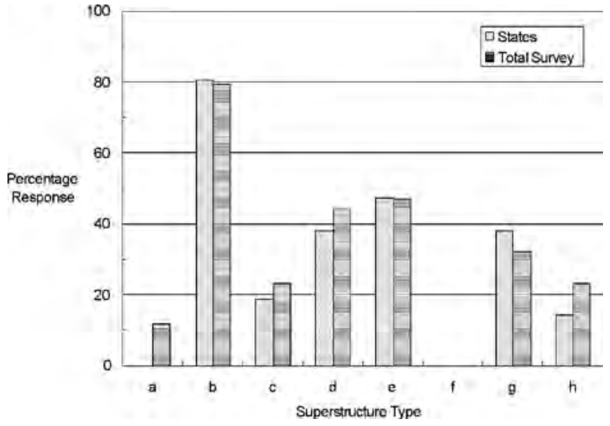

a. Simple spans with no cast-in-place concrete or bituminous wearing surface
b. Simple spans with cast-in-place concrete wearing surface
c. Simple spans with bituminous wearing surface only
d. Simple spans with waterproofing membrane and bituminous wearing surface
e. Continuous spans with composite cast-in-place concrete wearing surface
f. Integral abutments with no cast-in-place concrete or bituminous wearing surface
g. Integral abutments with composite cast-in-place concrete wearing surface
h. Other

FIGURE 9 Survey responses for superstructure types.

and 3 to 9 in. for the total survey. For owners that build continuous spans with a cast-in-place concrete deck, approximately 90% design the bridges for live-load continuity. The "other" superstructure type, reported by Massachusetts, New Hampshire, and three Canadian provinces, was a cast-in-place concrete topping with waterproofing membrane and asphalt wearing surface.

El-Remaily et al. (1996) reported that composite topping is not a structurally efficient solution for the transfer of forces at the longitudinal joint, because it does not control differential rotation of the box and it is not an economical solution because a composite concrete topping costs about four times as much as a thin layer of bituminous concrete.

KEYWAY CONFIGURATIONS

Keyway configurations are generally defined as partial depth or full depth. The depth refers to that of the grout and not the depth of the box beam. Therefore, a full-depth keyway does not extend to the bottom of the beam because a gasket must be placed near the bottom of the beam to prevent the grout from falling out. Typical keyway configurations and a new Illinois Department of Transportation (DOT) detail are shown in Figure 10.

In the survey conducted for this synthesis, 82% of the state respondents and 73% of the total respondents reported that they use a partial-depth keyway. Most of the others reported using a full-depth keyway.

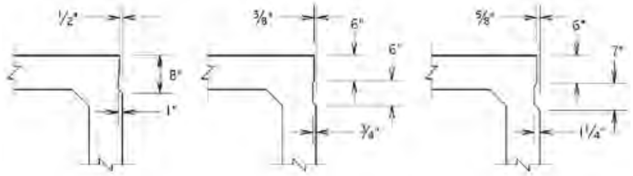

Typical keyway configurations Illinois DOT new details
The left and center drawings are typical keyway configurations.
The right drawing is the Illinois DOT new details.

a. Partial Depth

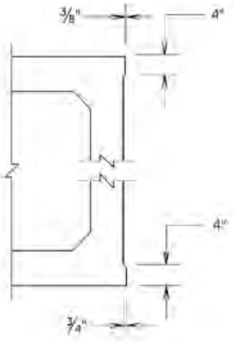

b. Full Depth

FIGURE 10 Examples of keyway configurations.

In New York State before 1992, adjacent box beams were connected through a grouted shear key designed to transfer shear force between individual beam units (Lall et al. 1997, 1998). The keyway extended to a depth of about 12 in. from the top of the beam. A cast-in-place deck, at least 6 in. thick and reinforced with welded wire reinforcement, was made composite with stirrups projecting from the beams. Longitudinal cracks began appearing in the concrete overlays immediately after construction. Over time, cracks developed over nearly all shear keys. A survey indicated that 54% of the box beam bridges built between 1985 and 1990 had developed longitudinal cracks over the shear keys (Lall et al. 1997, 1998).

In 1992, a design change was made to increase the depth of the shear key to almost the full depth of the precast unit. A change to the transverse tie requirements, as discussed in the next section, was also made.

A 1996 survey of 91 bridges built from 1992 through early 1996 found that 23% of the bridges had shear key–related longitudinal cracking compared with 54% for the previous inspection. Analysis of the data by age of structure at time of inspection showed that the new full-depth shear-key system reduced the percentage of decks with cracks by about 50% (Lall et al. 1997, 1998).

Keyway configurations in Japan have been described by Yamane et al. (1994) and El-Remaily et al. (1996). Cross-sectional shapes are similar to those in the United States except for the size and shape of the longitudinal joint between beams, as shown in Figure 11. In Japan, cast-in-place concrete is placed in relatively wide and deep longitudinal joints between beams as opposed to the narrow mortar-grouted joints used in the United States. About 6 in. of clear spacing in the longitudinal joint is used in Japan to accommodate differential camber between adjacent beams.

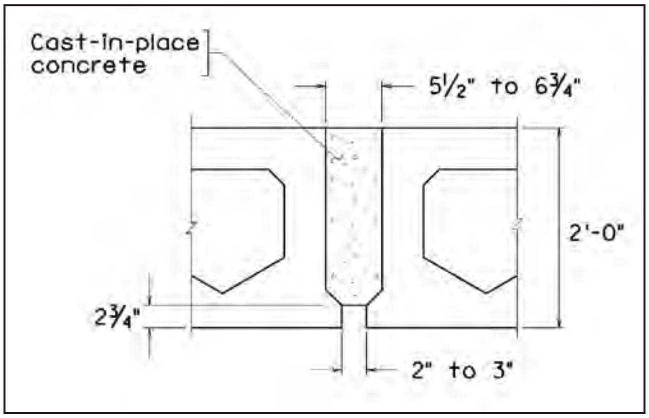

FIGURE 11 Japanese keyway.

All highway bridge decks are covered with 2 to 3 in. of concrete or an asphaltic concrete wearing surface. El-Remaily et al. (1996) reported that longitudinal cracking is seldom reported for Japanese adjacent box beam bridges of this type.

The performance of three different grouted joint configurations used between the flanges of adjacent decked prestressed concrete bridges was compared analytically by Dong et al. (2007). The forces on the joint were determined from an analysis of typical decked prestressed concrete bridge superstructures subjected to various live-load configurations. Various combinations of normal horizontal force, transverse bending moment, vertical shear, and horizontal longitudinal force were applied to finite element models of the three joint configurations shown in Figure 12. Three different grout strengths of 3.5, 7.0, and 10.5 ksi were assumed. The tensile strength of the grout was assumed to be $0.19\sqrt{f_c'}$ ksi. Comparisons based on the maximum principal stresses in the grout indicated stresses in Joint A below the assumed tensile strength. Stresses in Joints B and C exceeded the tensile strength for all grout strengths.

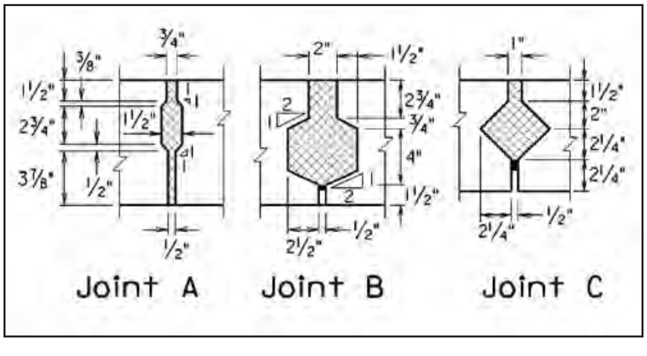

FIGURE 12 Keyway configurations analyzed by Dong et al. (2007).

Based on their research, Miller et al. (1999) suggested that a full-depth shear key may stop the joint from acting like a hinge and prevent the joint from opening. With a partial-depth grouted keyway, the area below the keyway is open and free to move. If the area is grouted, the movement at the joint may be reduced.

Nottingham (1995) reported on the use of a wider full-depth joint between precast units as used in Alaska. The minimum joint width was 2 in., with the sides of the keyway sandblasted and washed. The wider configuration accommodates panel tolerances more readily and helps ensure full grout-to-beam contact. With the wider joint, a form is needed below the joint instead of the joint packing or backer rod often used for narrower joints.

TRANSVERSE TIE DETAILS

In the survey conducted for this synthesis, respondents identified the types of transverse ties used between the box beams. The results are shown in Figure 13. Some respondents use more than one type of tie.

It may be concluded that the most common types of transverse ties are unbonded post-tensioned strands or bars with

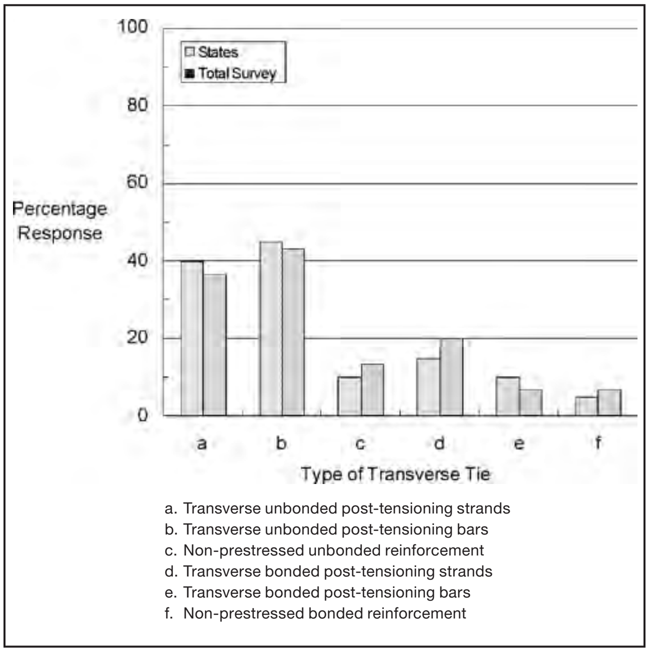

FIGURE 13 Survey results of types of transverse ties used.

some owners using both types. Eighty-two percent of the respondents used post-tensioning strands or bars that were either bonded or unbonded.

The survey indicated a range of ways in which the post-tensioning force is defined, including force per bar or strand, force per duct, and torque on a threaded bar. The number of transverse tie locations varied from one to five per span, depending on span length. The Illinois DOT calculates the number of ties (N) according to the following equation (Anderson 2007):

$N = \left(\frac{Span}{25} - 1\right) \geq 1$ and rounded up to the nearest integer.

Ties were located at the ends, midspan, quarter points, and third points, depending on the number of ties. The different arrangements are shown schematically in Figure 14. Approximately 70% of the respondents reported that the ties were placed at mid-depth. If two strands or bars were used at one longitudinal location, they were placed at the third points in the depth. Other responses included specific location depths.

In New York State before 1992, transverse ties were not used in adjacent box beam bridges with spans up to 50 ft (Lall et al. 1997, 1998). For spans from 50 to 75 ft, one transverse tendon was used at the center. For spans longer than 75 ft, tendons were used at the outer quarter points. The tendons were stressed to a force of 30 kips. In 1992, the number of transverse tendons was increased to three for spans of less than 50 ft and five for spans equal to or greater than 50 ft. This change may have contributed to the reduction in cracking discussed in the previous section.

For many years, Pennsylvania DOT (PennDOT) used 1.25-in.-diameter steel rods or strands to tie beams together (Macioce et al. 2007). In practice, the beams were only minimally pulled together by tightening nuts on the rods. For some older bridges, deterioration of the grout in the shear key led to severe corrosion of the tie rod and to eventual failure. Today, the strand is continuous from fascia to fascia and post-tensioned to about 30 kips per location resulting in an average force of about 0.6 kips/ft.

The distribution of transverse stress caused by applying 40-kip post-tensioning forces at 12-ft centers to a three-beam assembly was investigated analytically by Huckelbridge and El-Esnawi (1997). They determined that the force was effective only over a distance of about 2.5 ft. They observed that for the transverse force to be fully effective would require such close spacing that much of the economic attractiveness of the box beam system would be sacrificed.

Research by Hawkins and Fuentes (2003) showed that, if the tie rods remain snug, they contribute significantly to load distribution among the beams.

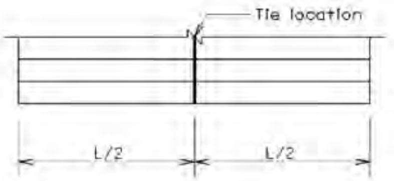

a. One Tie

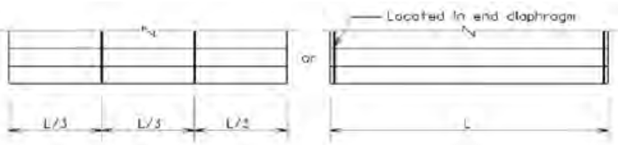

b. Two Ties

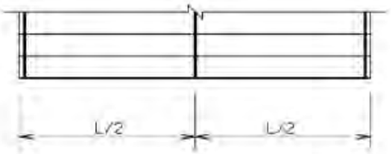

c. Three Ties

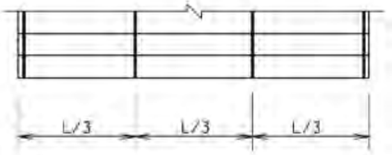

d. Four Ties
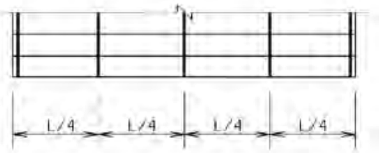
e. Five Ties

FIGURE 14 Schematic of transverse tie spacings.

In Japan, four to seven equally spaced diaphragms, including the end diaphragms, are commonly provided for box beam bridges (El-Remaily et al. 1996). The reported Japanese design philosophy is that concrete diaphragms with transverse post-tensioning produce a more durable system and more efficient load distribution between beams (Yamane et al. 1994). The diaphragms and cast-in-place concrete between adjacent beams are integrated by post-tensioning through the diaphragms. The amount and location of the post-tensioning are determined by the flexural design.

A nontensioned reinforced concrete connection between adjacent box beams has been proposed by Hanna et al. (2007, 2008). In this connection, the joint has a width of 8 in. with loop bars protruding from the sides of the boxes and overlapping loop bars from the adjacent boxes.

Longitudinal bars are placed through the loops and cast-in-place concrete is used to fill the joint. This detail is similar to the deck joint detail used by the Japanese and the French Poutre Dalle system (Ralls et al. 2005).

DESIGN CRITERIA FOR CONNECTIONS

Eighty-one percent of states and 89% of the respondents to the survey stated that they did not make any design calculations to determine the number of transverse ties between box beams. As part of the survey for this synthesis, some respondents provided information about the post-tensioning force used for each transverse tie and the spacing of ties. Based on this information, the average transverse force per unit length for various numbers of ties was calculated. The results are shown in Figure 15 for 11 states. Where a single value is shown, it is based on the specified maximum spacing between ties. If the ties are closer than the minimum, the force will be higher than shown in the figure. For some states, a range of forces is presented because these states used a fixed number of ties for a range of span lengths.

El-Remaily et al. (1996) proposed a methodology for the transverse design of precast concrete box beam bridges without composite topping. The methodology involves the use of rigid post-tensioned transverse diaphragms as the primary wheel load transfer mechanism between adjacent boxes. The diaphragms are provided at the ends, quarter points, and midspan. Two post-tensioning tendons through the diaphragms are stressed after the longitudinal joints are grouted. One tendon is placed near the top and the other near the bottom of the diaphragm.

A grid analysis was used to determine member forces for various combinations of box depths, bridge widths, and span lengths. The required transverse force was almost linearly proportional to the span length and increased significantly with bridge width. Shallower sections required more post-tensioning than deeper sections. A design chart was provided for preliminary determination of the post-tensioning required for standard beam depths and common bridge widths. Values of prestressing force for the midspan diaphragm ranged from 4 to 14 kips/ft. The design chart was subsequently updated by Hanna et al. (2007) to include changes in the AASHTO LRFD specification for live load and dynamic load allowance. Their analysis indicated that the impact of the skew angle on the required post-tensioning force is minimal for deep beams and increases slightly with skew angle for shallow beams.

To avoid the necessity of grid analysis for every bridge, Hanna et al. (2007) developed the following equation as a best fit for the data points of all cases analyzed:

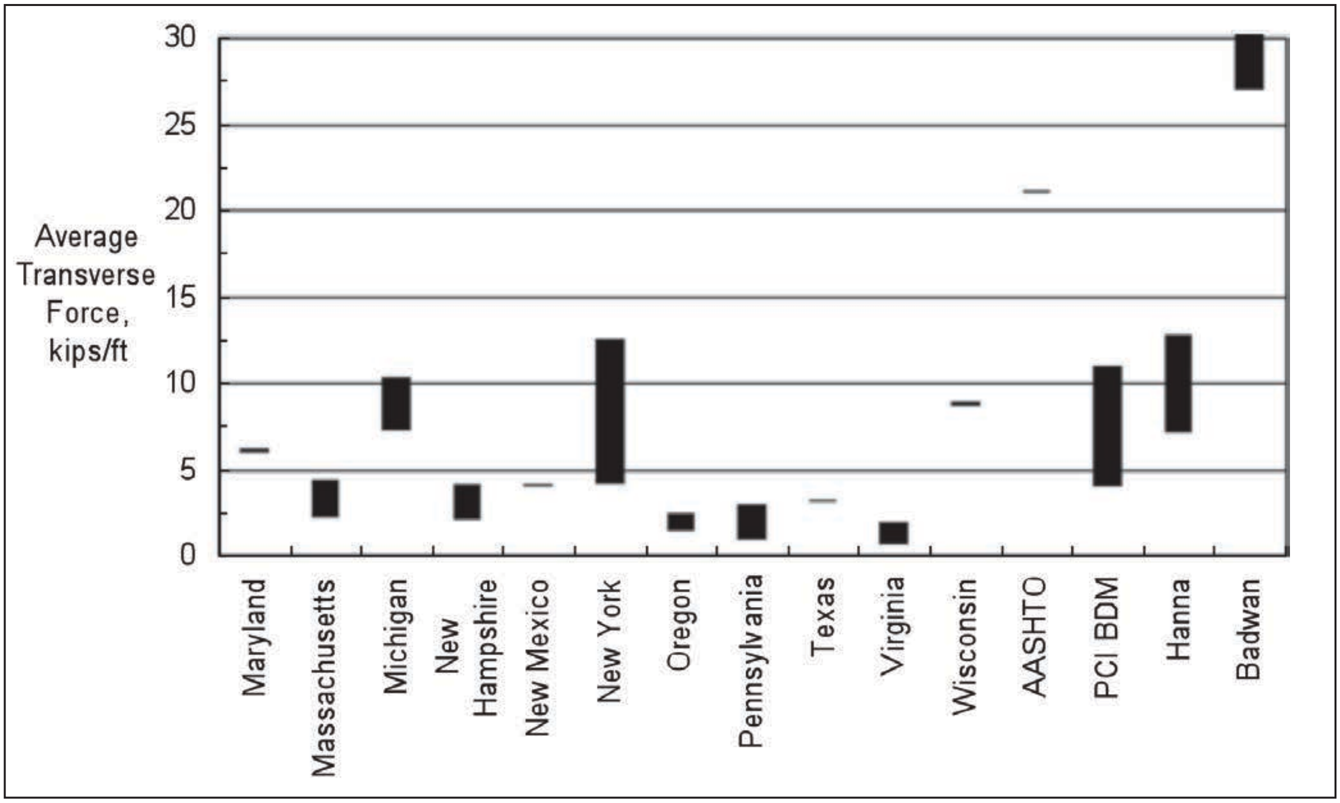

FIGURE 15 Range of average transverse post-tensioning forces. *Note:* PCI BDM = *PCI Bridge Design Manual* (1997/2004).

$$P = \left(\frac{0.9W}{D} - 1.0\right) K_L K_S \leq \left(\frac{0.2W}{D} + 8.0\right) K_L K_S$$

where

P = transverse force/ft

D = box depth, ft

W = bridge width, ft

L = bridge span, ft

θ = skew angle, degree

K_L = correction factor for span-to-depth ratio

$= 1.0 + 0.003\left(\frac{L}{D} - 30\right)$

K_S = correction factor for skew angle

$= 1.0 + 0.002\,\theta$

Badwan and Liang (2007) presented an analysis using grillage analogy to calculate the required transverse post-tensioning stress for a deck built with precast multibeams. Variables included in the analyses were span length, deck width, beam depth, and skew angle. A solid section beam was assumed with depths ranging from 15 to 20 in., which are less than the smallest box beam cross sections. A full-depth grout joint was assumed.

The skew angle of the deck was found to be the most critical factor affecting the required transverse post-tensioning stress. This appears to contradict the conclusion by El-Remaily et al. (1996) that the effect of skew angle was minimal. The Badwan and Liang (2007) analysis showed that the required stress in skewed decks was generally less than that required in a tangent (no-skew) deck. For no-skew bridges, the required stress was independent of deck width but decreased as deck width increased for skew angles greater than 15 degrees. The required stress increased as span length increased, which agrees with the results of El-Remaily et al. (1996). The required post-tensioning stress parallel to the skew varied from about 0.15 to 0.27 ksi and in most situations was less than the 0.25 ksi specified in the LRFD Specifications (AASHTO 2007/2008). A stress of 0.15 ksi applied uniformly to a beam depth of 15 in. is 27 kips/ft and a stress of 0.27 ksi on a depth of 20 in. is 65 kips/ft. However, the stress does not necessarily need to be applied to the full depth of the section (R.Y. Liang, personal communication, Aug. 2008).

For comparison purposes, the range of values based on the work of Hanna et al. (2007) and Badwan and Liang (2007) are included in Figure 15. The forces determined from the Hanna et al. equations have similar values to those used by Michigan and New York, but these forces are higher than those used by the other states. Badwan and Liang (2007) values are very high, because they reported their values as required transverse post-tensioning compressive stresses. For Figure 15, it was assumed that these stresses acted over the full depth of the section used in their analyses. Figure 15 also includes the AASHTO values based on a compressive stress of 0.25 ksi applied over a keyway depth of 7 in., which is discussed in chapter three.

A design chart to determine the required effective transverse post-tensioning force is provided in the *PCI Bridge Design Manual* (PCI 1997/2004). This chart is based on the work of El-Remaily et al. (1996) and was described earlier. Values from the PCI manual are included in Figure 15.

An analysis of 16 Michigan bridges selected at random showed that the transverse post-tensioning was generally greater than required by the PCI procedure, depending on span length and beam depth. Field inspection data revealed that the use of a high level of post-tensioning force did not prevent reflective cracking (Attanayake and Aktan 2008).

In an example of a Japanese box beam bridge, Yamane et al. (1994) reported an average transverse post-tensioning force of 11 kips/ft. When compared with the data in Figure 15, this value is higher than used by many states.

In addition to consideration of the magnitude of the transverse post-tensioning force, the vertical location of the force relative to the depth of the keyway is equally important. Consider a partial-depth keyway that is grouted before post-tensioning with the post-tensioning located at mid-depth of the box. A typical partial-depth grouted keyway has a depth of 12 in. The minimum size box beam has a depth of 27 in. The center of the post-tensioning force is 13.5 in. below the top of the box or 1.5 in. below the bottom of the keyway. When the post-tensioning force is applied, tensile stresses are induced in the grout at the top of the box and the box section will rotate until the bottom flanges come into contact. At that time, the post-tensioning force becomes approximately concentric on the joint. Box beams may not be perfectly straight, however, and are difficult to place in intimate contact along their complete length. Consequently, with a partial-depth grouted keyway and the post-tensioning applied at mid-depth of the box, it is likely that tensile stresses and cracking can occur when the post-tensioning is applied. The situation becomes more critical with deeper boxes because the grout depth remains constant.

Next consider a full-depth keyway that is grouted before post-tensioning and the post-tensioning force is located at mid-depth of the box. The post-tensioning force is now almost concentric with the grouted keyway, and compressive stresses will be applied to both top and bottom of the keyway. These stresses must be overcome by the external forces before cracking along the keyway occurs. Therefore, if the post-tensioning is applied at about mid-depth of the box, it is better to have a full-depth keyway.

When the transverse post-tensioning is applied at mid-depth of the box, it is necessary to have a diaphragm to prevent the anchorage from punching through the web. However, the diaphragm functions as a stiff lateral member and, therefore, most of the post-tensioning force goes into the diaphragm and is not distributed longitudinally to provide a uniform compression across the keyway. At the end diaphragms, some of the post-tensioning force is transferred into the bearings, which causes them to deform laterally. The amount of force absorbed by the bearings depends on their stiffness. If the bearing is sufficiently flexible, the force will not be great. If the bearings are stiff, they could absorb a large amount of the post-tensioning force.

EXTERIOR BEAM DETAILS

According to the results from the survey for this synthesis, approximately two-thirds of the respondents use an exterior beam design that is the same as the interior beams. The main reasons given for using different designs were the dead load of the parapet, curb, railing, and sidewalk and live-load distribution.

According to Macioce et al. (2007), barrier weight is 50% to 100% of the self-weight of a box beam. A survey of five states by PennDOT indicated that the following assumptions are used by different states for distribution of barrier dead load:

- 100% when analyzing the fascia beam and 50% when analyzing the first interior beam
- 50% to fascia beam and first interior beam
- 33% to fascia beam, first interior beam, and other interior beam
- Equally distributed to all beams
- Equally distributed to all beams unless evidence shows beams acting independently, then 100% to the fascia beams

The Illinois DOT's practice is to avoid the use of a concrete barrier on this type of structure whenever possible based on the belief that the barrier stiffens the fascia girder and live-load differential deflection will accelerate deterioration of the keyway between the fascia girder and first interior girder (Macioce et al. 2007).

Research conducted at the University of Pittsburgh showed that the eccentric load effect caused by the barrier load on the edge of the beam resulted in a minimal reduction in the flexural capacity of box beams (Harries 2006).

CHAPTER THREE

SPECIFICATIONS AND CONSTRUCTION PRACTICES

AASHTO STANDARD SPECIFICATIONS

The majority of adjacent box beam bridges in existence today were probably designed in accordance with the AASHTO Standard Specifications for Highway Bridges. Article 3.2.3.4 of the 17th edition (AASHTO 2002) addresses load distribution in multibeam bridges constructed with prestressed concrete beams that are placed side by side on supports:

> The interaction between the beams is developed by continuous longitudinal shear keys used in combination with transverse tie assemblies which may, or may not, be prestressed, such as bolts, rods, or prestressing strands, or other mechanical means. Full-depth rigid end diaphragms are needed to ensure proper load distribution for channel, single- and multi-stemmed tee beams.

A procedure is then provided to calculate the distribution of wheel loads to each beam.

Section 9 of the specifications addresses prestressed concrete analysis and design. Article 9.10.3.2 states that, for precast box multibeam bridges, diaphragms are required only if necessary for slab-end support or to contain or resist transverse tension ties.

Other than the articles cited previously, the AASHTO Standard Specifications do not provide any guidance for the design or construction of the connection between adjacent box beams. It is, therefore, not surprising that different practices have developed.

AASHTO LRFD SPECIFICATIONS

Article 4.6.2.2 of the AASHTO LRFD Bridge Design Specifications (2007/2008) addresses approximate methods of analysis of beam-slab bridges. The commentary of Article 4.6.2.2.1 states that the transverse post-tensioning shown for some cross sections is intended to make the units act together. A minimum 0.25 ksi prestress is recommended. The depth over which the 0.25 ksi is applied is not clearly defined in this article. However, an illustration in Table 4.6.2.2.1-1 shows the force applied at the level of the top flange in adjacent box beam bridges without a concrete overlay. Precast concrete bridges with longitudinal joints are considered to act as a monolithic unit if sufficiently interconnected. The interconnection is enhanced by either transverse post-tensioning with intensity of 0.25 ksi or by a reinforced structural overlay or both. The commentary in the article cautions that the use of transverse mild steel rods secured by nuts should not be considered sufficient to achieve full transverse flexural continuity unless demonstrated by testing or experience. Generally, post-tensioning is thought to be more effective than a structural overlay if the intensity of 0.25 ksi as specified above is achieved.

Article 5.14.4.3 and its related commentary—beginning with C5.14.4.3.2—contain the following provisions for precast deck bridges made using solid, voided, tee, and double-tee cross sections:

> *5.14.4.3.2 Shear Transfer Joints*
>
> Precast longitudinal components may be joined together by a shear key not less than 7.0 in. in depth. For the purpose of analysis, the longitudinal shear transfer joints shall be modeled as hinges.
>
> The joint shall be filled with nonshrinking grout with a minimum compressive strength of 5.0 ksi at 24 hours.
>
> *C5.14.4.3.2*
>
> Many bridges have indications of joint distress where load transfer among the components relies entirely on shear keys because the grout is subject to extensive cracking. Long-term performance of the key joint should be investigated for cracking and separation.
>
> *5.14.4.3.3 Shear-Flexure Transfer Joints*
>
> *5.14.4.3.3a General*
>
> Precast longitudinal components may be joined together by transverse post-tensioning, cast-in-place closure joints, a structural overlay, or a combination thereof.
>
> *C5.14.4.3.3a*
>
> These joints are intended to provide full continuity and monolithic behavior of the deck.
>
> *5.14.4.3.3c Post-Tensioning*
>
> Transverse post-tensioning shall be uniformly distributed in the longitudinal direction. Block-outs may be used to facilitate splicing of the post-tensioning ducts. The compressed depth of the joint shall not be less than 7.0 in., and the prestress after all losses shall not be less than 0.25 ksi therein.
>
> *C5.14.4.3.3c*

> When tensioning narrow decks, losses due to anchorage setting should be kept to a minimum. Ducts should preferably be straight and grouted. The post-tensioning force is known to spread at an angle of 45 degrees or larger and to attain a uniform distribution within a short distance from the cable anchorage. The economy of prestressing is also known to increase with the spacing of ducts. For these reasons, the spacing of the ducts need not be smaller than about 4.0 ft. or the width of the component housing the anchorages, whichever is larger.
>
> *5.14.4.3.3d Longitudinal Construction Joints*
>
> Longitudinal construction joints between precast concrete flexural components shall consist of a key filled with a nonshrinkage mortar attaining a compressive strength of 5.0 ksi within 24 hours. The depth of the key should not be less than 5.0 in. If the components are post-tensioned together transversely, the top flanges may be assumed to act as a monolithic slab. However, the empirical slab design specified in Article 9.7.2 is not applicable.
>
> The amount of transverse prestress may be determined by either the strip method or two-dimensional analysis. The transverse prestress, after all losses, shall not be less than 0.25 ksi through the key. In the last 3.0 ft. at a free end, the required transverse prestress shall be doubled.
>
> *C5.14.4.3.3d*
>
> This Article relates to deck systems composed entirely of precast beams of box, T- and double-T sections, laid side-by-side, and, preferably, joined together by transverse post-tensioning. The transverse post-tensioning tendons should be located at the centerline of the key.

Articles 5.14.4.3.3c and 5.14.4.3.3d clearly require a transverse prestress of at least 0.25 ksi on a compressed depth of at least 7 in. This amounts to a transverse force of 21 kips/ft. This requires 0.5-in.-diameter, 270-ksi low-relaxation strands stressed to 189 ksi after losses at 16.5-in. centers. If based on a 5-in. depth as stated in Commentary C5.14.4.3.3d, the force would be 15 kips/ft. Commentary C5.14.4.3.3d states that the post-tensioning tendons should be located at the centerline of the key, whereas 68% of the respondents to the survey for this synthesis reported that the ties were placed at mid-depth of the section.

BEARING TYPES

Bearing types are either plain elastomeric or laminated elastomeric. In the survey conducted for this synthesis, approximately three-quarters of the respondents reported the use of plain elastomeric bearings. Forty-two percent of the states and 56% of the total respondents use one full-width support on each end, whereas two-point supports at each end are used by 42% of the states and 38% of the total respondents. The remainder, with one exception, use two-point supports at one end and one-point supports at the other. The exception reported the use of partial-width bearings with preformed asphalt joint filler under the remaining area. With two supports at one end, adjacent beams may be supported by the same bearing pad that extends under adjacent beams. Half the respondents reported experiences with uneven seating. This was more prevalent in bridges that used a full-width support at each end.

CONSTRUCTION SEQUENCE

Results from the survey conducted for this synthesis indicate that, in single-stage construction, three-quarters of the respondents erect all beams and then connect them together at one time as illustrated in Figure 16a. About 40% of the respondents erect and connect the first two beams, erect the third beam and connect it to the second beam, and so on as shown in Figure 16b. Some respondents permit both methods.

In two-stage construction, one of the following sequences is used:

- Continue the sequence of erecting and connecting one beam at a time. The first beam of the second stage is erected and connected to the last beam of the first stage. The second beam of the second stage is then erected and connected to the first beam of the second stage and so on.
- All beams in the second stage are erected and then connected at one time with the second-stage transverse ties spliced to the ties of the first stage.
- All beams in the second stage are erected and then connected at one time with the second-stage transverse ties passing through the first-stage beams. This requires two sets of holes in the first-stage beams. Another variation is to connect all second-stage beams to the last beam of the first stage.

The construction sequence is also dependent on the skew of the bridge and the use of skewed or right-angle intermediate diaphragms. With a skewed bridge and perpendicular intermediate diaphragms, the beam-to-beam connection system is easier. With a skewed bridge and skewed diaphragms, either a beam-to-beam approach or all beams connected at one time is possible. Approximately one-half of the respondents to the survey for this synthesis reported that the keyways were grouted before transverse post-tensioning and one-half after post-tensioning. Post-tensioning before grouting places a higher transverse stress in the beams where they are in contact because the bearing area is less. The grout then functions as a filler and may transfer some shear force, but it will transfer only the compressive stress of any transverse bending moments. Post-tensioning after grouting puts a compressive stress in the grout and across the interface between the grout and the beams, and it provides a higher moment capacity before the precompression is overcome.

The decision to grout before or after post-tensioning appears to be related to the construction sequence. When

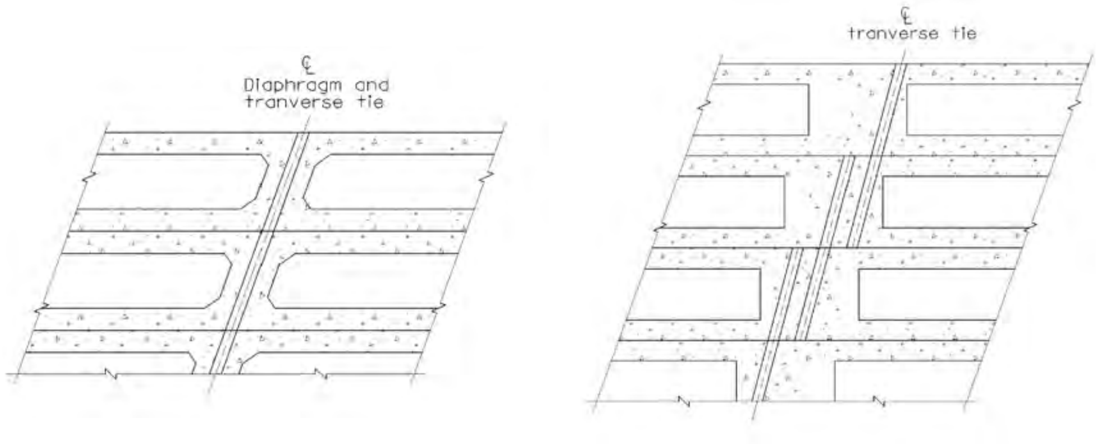

Skew diaphragms

Small skew angle

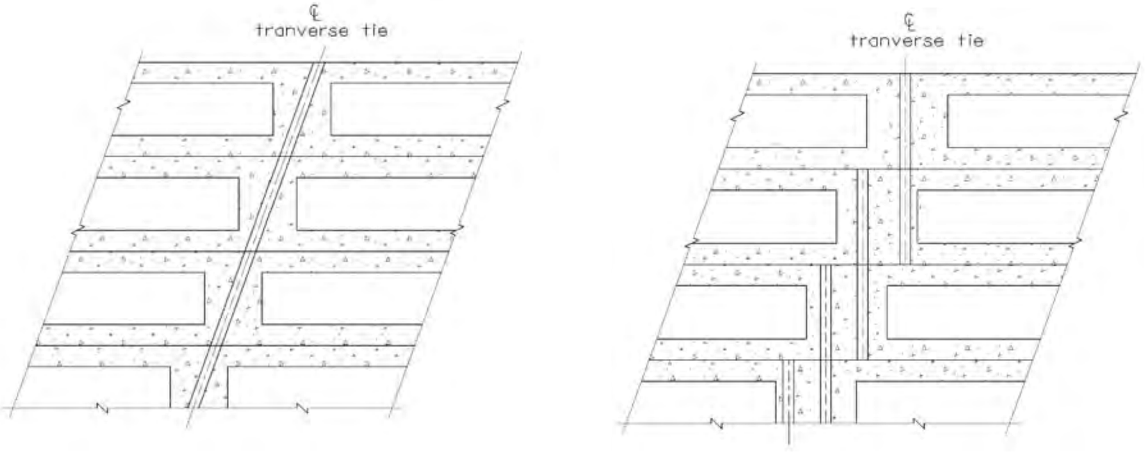

Perpendicular diaphragms

Any skew angle

a. Single transverse tie

b. Perpendicular diaphragms with staggered transverse ties connecting adjacent beams

FIGURE 16 Transverse tie and diaphragm arrangements on skew bridges.

all beams are post-tensioned at one time, the option exists to grout all keyways before or after post-tensioning without delaying construction. When beams are connected in pairs, it becomes necessary to allow the grout in the first keyway to gain strength before the first pair of beams can be post-tensioned and the next beam placed. This extends the construction time.

Greuel et al. (2000) reported on the erection of an Ohio bridge in two phases. In Phase I, one-half of the old bridge was removed and replaced with seven adjacent box beams. After transverse threaded rods were tightened using a torque wrench to pull the beams together, the shear keys were grouted and the longitudinal joints were sealed. Traffic was then rerouted onto the completed half of the new bridge. In Phase II, the second half of the bridge, consisting of five box beams, was constructed. The beams were installed sequentially along with the installation and tightening of the threaded rods. However, only the shear keys between the five beams were grouted. The shear key at the construction joint between the two phases was not grouted because of movement in the first-phase beams caused by traffic. Without the shear key grouted, movement of the last beam in Phase I caused spalling on the bottom flange of the first beam in Phase II. To arrest the spalling, the tension in the threaded rods across the construction joint was relieved. Subsequently, the traffic was rerouted during the night, the threaded rods were retightened, and the shear keys were grouted with a fast-setting magnesium phosphate grout.

DIFFERENTIAL CAMBER

In the survey conducted for this synthesis, approximately one-third of the respondents reported that they had limitations on the differential camber between adjacent beams. One-half of those with limitations indicated that the maximum was 0.5 in. Other variations included 0.25 in. in 10 ft, 0.75 in. maximum, and 1 in. between the high and low beam in the same span. Methods to remove excessive camber included (1) loading the high beam before grouting and post-tensioning, (2) placing the barrier on the high beam, (3) adjusting bearing seat elevations, (4) accommodating the differential in the concrete or asphalt overlay, and (5) preassembling the span before shipment to obtain best fit.

KEYWAY PREPARATION

Forty-five percent of the states responding to the survey stated that the keyways are sandblasted before the beams are installed. Of all the other respondents, only one—a county—reported using sandblasting. When sandblasting was used, it was always done before shipment. Approximately one-third of the respondents reported that additional preparation other than sandblasting was performed for the interior faces of beams. This generally involved cleaning with compressed air or water. One state reported applying a sealer to limit absorption from the grout. For the exterior face, only one-sixth of the respondents reported additional preparation.

A forensic investigation performed during the demolition of an adjacent box beam bridge in Michigan showed that shear-key mortar adherence to the beams was poor (Attanayake and Aktan 2008).

GROUTING MATERIALS AND PRACTICES

Results from the survey conducted for this synthesis showed that about 40% of the respondents use a nonshrink grout, about 25% use a mortar, and others use epoxy grout, epoxy resin, or concrete topping. The predominant method used to place the grout is by hand. Approximately 40% of the respondents provide no curing, 5% use curing compounds, and 45% wet cure. The remainder follows manufacturers' recommendations.

Based on experiences in Alaska, Nottingham (1995) stated that a high-quality, low-shrinkage, impermeable, high-bond, high early strength grout with user-friendly characteristics and low-temperature curing ability was needed. If a prepackaged grout mix was available to construction workers and an exact prescribed amount of water could be added, high-quality joints would be obtained more consistently. The material most closely meeting these requirements was a prepackaged magnesium-ammonium-phosphate grout often extended with pea gravel.

According to El-Remaily et al. (1996), West Virginia DOT investigated several high-volume, heavily loaded bridges that had joint failures and topping cracking. The investigators concluded that vertical shear failure in the keys was most likely the result of inadequate grout installation and transverse tie force. The ties used for the failed joints were 1-in. diameter, ASTM A36 rods spaced at the third points along the span and tightened with an approximate torque of 400 ft-lb. As a result of the investigation, the West Virginia DOT changed its practices to include the following:

- A pourable epoxy instead of a nonshrink grout in the shear key
- Sandblasting of surfaces in contact with the grout
- Post-tensioned ties to be used

In the Andover Dam Bridge in Upton, Maine, the shear keys between boxes were made wider than the Maine DOT's standard width and were filled using a self-consolidating concrete modified with the addition of a shrinkage-compensating admixture. This allowed the shear keys to be grouted rapidly.

On the Davis Narrows Bridge in Brooksville, Maine, a pea stone concrete mix was used in the shear keys instead of the conventional sand grout. This reduced the possibility of discharging material into the river. As an additional measure, the foam backer rods in the shear keys were bonded to the beams before erection and then were compressed into place during the erection of adjacent beams (Iqbal 2006).

To improve the quality of grout used in the joints, Illinois DOT now requires that a mechanical mixer be used to mix nonshrink grout. The grout could be worked into place with a pencil vibrator, and the surface needs to be troweled smooth and immediately covered with cotton mats for a minimum of 7 days. The curing period may be reduced if the contractor determines that the grout cube strength exceeds the specified strength. In no case shall the curing time be less than 3 days (Illinois DOT 2008).

CHAPTER FOUR

LONG-TERM PERFORMANCE, MAINTENANCE, AND REPAIRS

TYPES OF DISTRESS

In the survey for this synthesis, respondents identified the types of distress that they have observed at the joints between adjacent box beams. The results are summarized in Figure 17.

The most common types of observed distress are longitudinal cracking along the grout-to-box beam interface and water and salt leakage through the joint. Reflective cracks are often visible in the riding surface, as shown in Figures 18 and 19.

STATES REPORTING LITTLE OR NO OBSERVED DISTRESS

In the survey, several states reported little or no observed types of distress. Their practices are described here.

Massachusetts' current standard is to use either simple or continuous spans with a 5-in.-thick cast-in-place concrete topping, waterproofing membrane, and a 3.5-in.-thick bituminous wearing surface. The transverse ties are unbonded post-tensioning strands tensioned to 44 kips. For spans less than 50 ft, the transverse ties are located at the ends and midspan. For spans greater than 50 ft, the ties are at the ends,

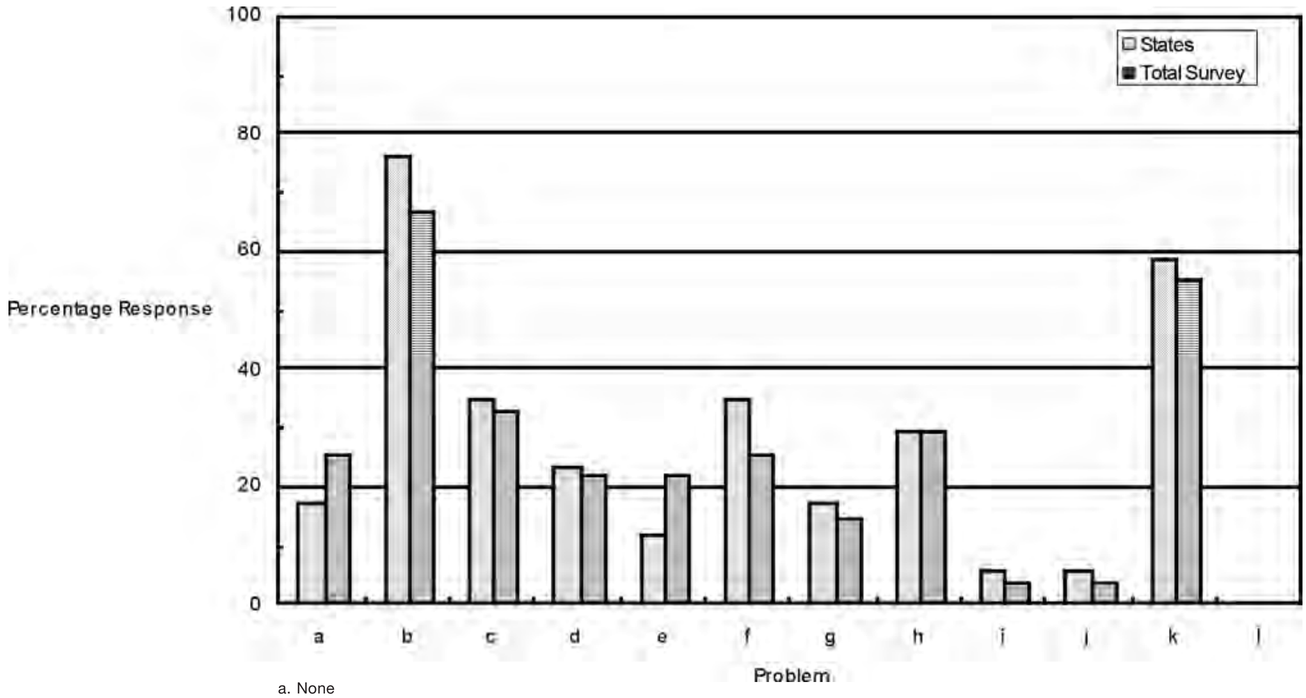

a. None
b. Longitudinal cracking along the grout and box beam interface
c. Cracking within the grout
d. Spalling of the grout
e. Spalling of the corners of the boxes
f. Differential vertical movement between adjacent beams
g. Corrosion of the transverse ties
h. Corrosion of the longitudinal prestressing strands
i. Freeze-thaw damage to the grout
j. Freeze-thaw damage to the concrete adjacent to the joint
k. Water and salt leakage through the joint
l. Other

FIGURE 17 Observed types of distress along the joints between adjacent box beams.

FIGURE 18 Longitudinal cracking in asphalt riding surface (*Source:* Henry G. Russell).

FIGURE 19 Longitudinal cracking in composite concrete deck (*Source:* New York State DOT).

quarter points, and midspan. For a 50-ft-long span, the average transverse force is 2.64 kips/ft. For a 100-ft-long span, the average force is 2.2 kips/ft. The full-depth keyways are grouted before post-tensioning with a two-component polymer-modified cementitious, fast-setting mortar. All beams are connected at one time.

Michigan reported that its only problem was spalling of the grout. Michigan's practice is to build simple and continuous spans with a composite concrete deck. Keyways have a partial depth and are filled by hand with a mortar after transversely post-tensioning. As shown in Figure 15, Michigan uses the second-highest amount of transverse post-tensioning of the 11 states that provided sufficient information to determine the transverse post-tensioning forces. The transverse ties are bonded post-tensioning bars tensioned to 104.5 kips for HS25 loading and 82.5 kips for HS20 loading. All beams are connected at one time.

Missouri reported that it recently started using box beam bridges and found no major leakage through the joints. Missouri's practice is to build simple spans with a cast-in-place deck or seal coat and asphalt wearing surface and continuous spans with a composite concrete deck. Keyways are partial depth and are filled with a nonshrink grout by hand. Adjacent box beams are connected in pairs using nontensioned unbonded reinforcement located at mid-depth of the box.

New Mexico's practice is to use simple spans with a 5-in.-thick composite cast-in-place concrete deck. Transverse ties consist of two bonded post-tensioning bars stressed to 50 kips with five ties per span spaced no more than 25 ft apart. This is equivalent to a force of at least 4 kips/ft. The partial-depth keyways are grouted after post-tensioning using a mortar. Adjacent box beams are connected in pairs. The New Mexico survey response indicated that the state does not build many of these types of bridges.

Although Oregon listed six types of distress, its survey response indicated that the types were not widespread. Oregon's practice is to build simple spans with a waterproofing membrane and bituminous wearing surface or continuous spans with a composite concrete deck. Keyways have a partial depth of 12 in. and are filled with a nonshrink grout by hand after post-tensioning. Adjacent box beams are connected in pairs with unbonded transverse post-tensioning located at mid-depth of the box. Transverse ties have a maximum spacing of 24 ft and are tensioned to 39 kips. This is equivalent to a force of at least 1.63 kips/ft.

Wyoming reported that the state has only one adjacent box beam bridge, which was built in 2004. It is a simple span structure with a cast-in-place concrete wearing surface and a span length of 120 ft. Partial-depth shear keys are used. Details of the transverse ties were not provided.

OTHER OBSERVATIONS

Shenoy and Frantz (1991) and Rao and Frantz (1996) reported on structural tests of box beams removed from a 27-year old bridge in Connecticut. The 54-ft simply supported bridge was made of 13 prestressed concrete box beams. Lateral post-tensioning was provided at each end and midspan. The practice at the time of construction was to have no waterproofing membrane between the top of the beams and the 2-in.-thick asphalt wearing surface. As a result, water containing deicing salts was able to seep down into the beams, penetrate the concrete, and cause severe deterioration in some of the beams. Many of the shear keys leaked, as shown by efflorescent stains on the sides and bottoms of the beams. The concrete on the sides and bottoms of some beams was cracked and spalled, exposing prestressing strands and leading to rupture of one strand.

Whiting and Stejskal (1994) reported on a field survey of the condition of prestressed concrete bridge elements in adverse potentially corrosive environments. Their survey included two box beam bridges; one located in a temperate marine environment in Oregon and one in a deicing environment in Michigan. On the Oregon bridge, some amount of efflorescence between the box beams was noted, indicating migration of water from the deck surface down the sides of the beams. The box beam bridge in Michigan was in significantly worse condition than the one in Oregon. Longitudinal cracks had formed in the asphaltic wearing course and allowed salt-laden water to run down the exterior sides of the box beams. The chlorides had penetrated the concrete and caused corrosion of the prestressing steel. Heavy deposits of efflorescence and corroded strands could be seen at various locations on the bridge soffit. At most locations of missing concrete, exposed strands exhibited 100% loss of section.

Needham and Juntunen (1997) studied different types of distress in prestressed concrete box beams in Michigan and discussed the causes and effects of each (Ahlborn et al. 2005). During this study, chloride samples were taken from seven box beam structures and five I-beam structures to determine whether the chloride concentration in a representative number of typical prestressed concrete beams was high enough to initiate corrosion in the beams. The average measured chloride content of the box beam bridges was 0.42 kg/m^3 (0.71 lb/yd^3) on county highways and 0.98 kg/m^3 (1.65 lb/yd^3) on state highways. The average measured chloride content was 0.63 kg/m^3 (0.94 lb/yd^3) on the I-beam bridges. For both structures, the chloride content was higher at the ends of the beams. Based on the investigation of chloride content in box beam bridges, Needham and Juntunen (1997) concluded that the condition of the box beam bridges on county roads is better than that on state highways. The reason is likely the result of decreased traffic loads and fewer chemical deicers applied to the county roads. The investigation revealed that chloride contamination is primarily the result of leaky joints and filtration of water through the deck. The ends of the box beams exhibited greater deterioration than at other locations.

A survey conducted in conjunction with an investigation by PennDOT identified that seven states (Colorado, Florida, Illinois, Indiana, Ohio, Pennsylvania, and Virginia) have reported failures of box beam bridges (Macioce et al. 2007).

Ahlborn et al. (2005) reported on an inspection of eight bridges built before 1974 and seven bridges built after 1985 in Michigan. Attanayake and Aktan (2008) reported on the same 15 bridges plus two more. In Michigan between 1974 and 1985, significant changes were made in the construction of adjacent box beams. These included a change from an asphalt wearing surface to a 6-in.-thick reinforced concrete deck because of water leakage to the shear key, use of full-depth keyways instead of partial depth, and elimination of stiffened cardboard as the internal void former.

According to Ahlborn et al. (2005), longitudinal cracking was present in both pre-1974 and post-1985 bridge decks. All the pre-1974 bridges showed signs of prolonged exposure to moisture along beam edges and bottom flanges. Some also had calcium carbonate deposits on the underside. Similar deposits were also visible on the outside face of the fascia beam as a result of leakage through the concrete barrier to bridge deck interface. Rust stains were visible around drain holes, indicating some form of active corrosion. Delamination, spalling, and breakage of some tendons were concentrated along beam edges. Longitudinal cracking in box beam bottom flanges appeared to be caused by corrosion of the strand.

For bridges built after 1985, longitudinal cracking in the bottom flange and concrete spalling were not observed.

Attanayake and Aktan (2008) reported on the monitoring of a bridge constructed in Portage, Michigan, in 2007. The two-span straight bridge has span lengths of 79 ft and a width of 93 ft 5 in. The cross section consists of twenty-two 48 in. by 33 in. box beams. The total transverse force between boxes is about 16 kips/ft applied at six transverse locations using pairs of strands. Cracks along the shear key and beam interface were observed before and after post-tensioning was applied. The bridge deck was cast about 24 days after the transverse post-tensioning was applied and moist cured for 7 days. Fifteen days after casting the deck, the research team observed through thickness cracks that stemmed from the top surface of the deck above the abutments.

Miller et al. (1995) reported the removal of a sidewalk support beam from a bridge over the Maumee River in Defiance, Ohio, for testing. The bridge superstructure consisted of sixteen 33-in.-deep, 36-in.-wide, 76-ft-6-in.-long box beams with a cast-in-place composite deck. The two outside beams on each side of the bridge supported the sidewalk and were slightly raised and separated from the main bridge beams by a gap. This gap provided for drainage from the bridge. The exposed side of the sidewalk beams adjacent to the roadway was intended to have a waterproof coating, but there was no indication that the coating was ever applied. This was later confirmed by tests. Damage to the beam was caused by chloride-laden water penetrating the unprotected side of the beam and corroding the prestressing strands on the roadway side of the beam.

The beam was cast in 1980 and contained eighteen 0.5-in.-diameter strands. At the time of the tests, three strands in the corner of the beam adjacent to the roadway had corroded. The strand closest to the corner was missing along the entire length of the beam. The second strand had broken individual wires at various places. The third strand showed less corrosion. The corroded strands caused a loss of concrete in the lower corner region of the beam adjacent to the roadway.

Although the concrete barrier is not considered to act compositely with the fascia beam, it behaves compositely because it is rigidly attached. When open deflection joints are provided in the barrier, a change in stiffness occurs at the joint. This results in a concentrated rotation in the box beam below the joint. Extensive cracking can occur at this location. The joint also provides a path for salt-contaminated deck drainage to attack the exposed fascia girders. For these reasons, Macioce et al. (2007) recommend that barriers be made continuous.

According to a draft PCI report (PCI 2009), the predominant distress observed in adjacent box beam bridges is reflective cracking of the deck along the shear keys between beams and the associated degradation below the cracks. The cracking allows water and deicing chemicals to penetrate through the deck and may cause freeze-thaw damage to the concrete of the box beam or corrosion of the transverse tie.

MAINTENANCE PROCEDURES

Suggestions to maintain adjacent box beam bridges from survey respondents include the following:

- Seal the deck
- Remove the asphalt topping
- Seal the cracks
- Wash the decks annually

Macioce et al. (2007) report that limited maintenance activities are associated with this type of bridge. During removal and replacement of the asphalt wearing surface, a waterproofing membrane can be installed before the new wearing surface to improve performance. Open deflection joints in barriers that result in a concentrated rotation in the beam below the joint should be closed. This can be accomplished by removing the concrete in the barrier on both sides of the joint to expose the reinforcement, lap splicing a reinforcement across the joint with the exposed reinforcement, and recasting the concrete (Macioce et al. 2007).

REPAIR PROCEDURES

When asked what methods have been used to rehabilitate or retrofit adjacent box beam bridges, survey respondents mentioned the following:

- Add a reinforced concrete deck
- Add supplemental tie rods
- Replace the asphalt wearing surface with a concrete deck
- Use waterproofing membrane over the entire surface and reseal the deck

When installing a new concrete deck, it is important to thoroughly clean the top surface of the beams and, if necessary, add reinforcement dowels into the webs to provide composite action between the deck and the beams. Illinois believes that replacing asphalt wearing surfaces with a thicker reinforced concrete wearing surface is effective in prolonging the life of beams if they are in good condition and have not experienced salt exposure from leaking keyways. The current practice in Illinois is to use reinforced concrete overlays on new box beam bridges (Macioce et al. 2007).

FACTORS AFFECTING LONG-TERM PERFORMANCE

In the survey conducted for this synthesis, respondents reported the methods of construction that they have found to be most effective in preventing deterioration along the joints. The two items that were identified more than others were sufficient transverse post-tensioning and use of a concrete topping slab. Items that were identified as being noneffective included asphalt wearing surface with or without a waterproofing membrane, phased construction, and inadequate concrete overlay.

When asked to identify the factors that affect the long-term performance of adjacent box beam bridges, the survey responses were varied (see Table 1).

TABLE 1
FACTORS INFLUENCING LONG-TERM PERFORMANCE

	States (%)		Total Survey (%)	
Factor	Yes	No	Yes	No
Span Length	25	75	20	80
Simple Spans vs. Continuous Spans	27	73	24	76
Skew	57	43	48	52
Bearing Types	8	92	10	90
Topped vs. Untopped	80	20	72	28
Integral Abutments	27	73	24	76
Phased Construction	31	69	21	79
Waterproof Membrane	45	55	47	53
Exterior Beam Details	0	100	7	93
Maintenance	36	64	48	52

The survey also asked what problems have been observed with joints between adjacent units. The two major problems identified were longitudinal cracking along the grout-to-box beam interface and water and salt leakage through the joint. When a concrete topping was used, 65% of the responding states and 55% of the total respondents reported reflective cracking in the topping.

Following the collapse of a fascia box beam of the Lakeview Drive Bridge over I-70 in Washington County, Pennsylvania, the bridge was closed to traffic and selected beams removed for a detailed investigation by Lehigh University (Naito et al. 2006) and the University of Pittsburgh (Harries 2006). The four-span structure, built in 1960, had span lengths of 54, 89, 89, and 42 ft and a 51-degree skew. The cross section consisted of eight 4-ft-wide adjacent box beams. The fascia beam contained sixty 0.375-in.-diameter, 250-ksi strands. The wearing surface consisted of a 2-in.-thick asphalt layer applied directly to the top flange of the beams. No waterproofing membrane was provided.

The transverse ties between adjacent beams were 1-in.-diameter steel rods threaded at both ends and passing through 2.25-in.-diameter holes in the diaphragms. To accommodate the skew, the ties were staggered along the beam's length. These ties were reported to be heavily corroded such that their strength was seriously reduced. The report indicated that the corrosion may have occurred because of poor consolidation and poor construction of the longitudinal joint between adjacent beams (Naito et al. 2006). High chloride contents were measured on the interior and exterior faces of the webs and bottom flanges of the interior beams.

Harries (2006) reported that few of the beams located at the test site had evidence of intact shear keys. In cases in which shear keys were present, the grout was poorly consolidated. It was common to find asphalt material on the lower ledge of the shear key, indicating that the shear-key grout had not been present when the bridge was last paved.

Using the results of their bridge inspection (Lall et al. 1997), New York State DOT conducted studies to determine whether the incidence of cracking was related to such factors as span length, skew, average annual daily traffic (AADT), or bearing type. They concluded the following:

- Frequency of shear-key cracking did not increase with either span length or total bridge length
- Bridge skew angle was not directly related to frequency of shear-key cracking
- Some evidence indicates that bridges with higher AADT crack more often
- Bridges with fixed bearings crack somewhat more often than those with expansion bearings, but it was difficult to say whether the difference was significant

According to Hanna et al. (2007), the PCI subcommittee on adjacent member bridges conducted a survey on the current practices in the design and construction of adjacent box beam bridges in the United States and Canada. Most of these transportation agencies have experienced premature reflective cracks in the wearing surface on the bridges built in the late 1980s and early 1990s. These agencies have emphasized the importance of eliminating these cracks. According to the survey (Hanna et al. 2007), the states and provinces have recommended the following preventive actions based on lessons learned in the last two decades:

- Use cast-in-place concrete deck on top of the adjacent boxes to prevent water leakage and to uniformly distribute the loads on adjacent boxes
- Use nonshrink grout or appropriate sealant instead of the conventional sand/cement mortar in the shear keys, in addition to blast cleaning of keyway surfaces before grouting
- Use full-depth shear keys owing to their superior performance over the traditional top flange keys (recommended by a few states)
- Use transverse post-tensioning to improve load distribution and minimize differential deflections between adjacent box beams; adequate post-tensioning force should be applied after grouting the shear keys to minimize the tensile stresses that cause longitudinal cracking at these joints
- Use end diaphragms to ensure proper seating of adjacent boxes and intermediate diaphragms to provide the necessary stiffness in the transverse direction
- Use wide bearing pads under the middle of the box to eliminate the rocking of the box while grouting the shear keys (the use of sloped bearing seats that match the surface cross-slope is also recommended)
- Use adequate concrete cover and corrosion inhibitor admixtures in the concrete mix to resist the chloride-induced corrosion of reinforcing steel
- Eliminate the use of welded connections between adjacent boxes and avoid dimensional tolerances that result in inadequate sealing of the shear keys

Based on a PCI survey of 45 states and three Canadian provinces, the following design, fabrication, and construction practices have been shown to improve the performance of adjacent box beam bridges (PCI 2009):

- Design
  - Use high-performance or high-strength, low-permeability concrete in the beams and deck slab
  - Provide shear-key geometries that allow deck concrete to fill the key or use full-depth shear keys
  - Provide a minimum of 1.5 in. of cover to all reinforcement; use 2 in. of cover where practical
  - Use strand patterns that omit longitudinal prestressing strands in the exterior corners
  - Design for composite action with a reinforced concrete deck slab that has a minimum thickness of 5 in.
  - Minimize skews where practical
  - Provide lateral restraint at piers and abutments

  - Use corrosion inhibitor in the concrete mix design for the beams
  - Provide waterproofing between the top of the structural member and the overlay if a noncomposite overlay is to be used

- Fabrication
  - Use polystyrene material to form the voids
  - Provide consistent casting conditions to minimize differential camber in beams
  - Properly anchor void forms to prevent floating of forms during casting
  - Provide vent and drainage holes in boxes
  - When extending stirrups for shear connection to slab, consider the bent shape of bar so that it does not interfere with placement of void forms
  - When extending reinforcing steel at ends of beams, provide straight bars and bend after fabrication

- Construction
  - Consider a three-point bearing system to minimize rocking of beams
  - Provide transverse post-tensioning to compress the joints and minimize differential deflections between boxes
  - Sandblast shear keys before grouting or concreting
  - When using small shear keys, use epoxy grout in keyways (some agencies report success with nonmetallic, nonshrink grout)
  - Post-tension transverse ties before grouting shear keys on skewed bridges and post-tension after grouting on square bridges
  - Grind concrete pier and abutment surfaces, if necessary, to achieve a uniform bearing surface
  - In staged construction, provide a minimum gap of 1 ft between the last beam of the first stage and the first beam of the second stage to provide a closure pour
  - When differential camber occurs, use force to remove the differential, when practical, or use the joint grout material to provide smooth transition

In their study of New York state bridges, Lall et al. 1997, 1998 concluded that the frequency of longitudinal cracking was unrelated to maximum span length, total bridge length, and bridge skew.

CHAPTER FIVE

INSPECTION PRACTICES

VISUAL INSPECTION

Visual inspection is the current state-of-the-practice used to document the condition of beams (Macioce et al. 2007). This was verified by the survey for this synthesis, which had 100% of the states and 90% of total respondents using only visual inspection for box beam bridges. The two other methods mentioned were chain dragging and full deck survey.

Visual inspections are unable to detect the corrosion of unexposed prestressing strands. Research by Hawkins and Fuentes (2003) found that the high tensile stress in the strands causes them to corrode at a faster rate than that of conventional reinforcement and welded wire reinforcement.

Cardboard forms were often used in past construction to form internal voids. These forms were susceptible to damage from water entering the voids through seepage along the tie rod or through steam vent holes in the top flange of the box. Drain holes are needed in the bottom flange of the box, but these holes can become clogged and need to be unclogged on a regular basis.

Harries (2006) reported that there does not appear to be a practical manner to assess the condition of the shear keys between adjacent beams. However, water dripping from the joints between beams during a period of rain (or icicles as shown in Figure 20) or longitudinal staining caused by water “wicking” along the beam soffit (see Figure 21) represents observable evidence that the shear key is degraded.

FIGURE 20 Leakage through longitudinal joints (*Source:* Pennsylvania DOT).

FIGURE 21 Efflorescence on the underside, indicating leakage through the joints (*Source:* New York State DOT).

IDENTIFICATION OF CORROSION

The two visible means to identify corrosion are as follows: (1) rust stains that appear on the surface or (2) spalled concrete exposing corroded reinforcement. By the time either of these are visible, active corrosion has been ongoing for some time. Procedures to identify corrosive environments and active corrosion in concrete have been reported by ACI Committee 222 (2001).

Electrical methods such as the half-cell potential and linear-polarization methods may be used to evaluate corrosion activity in concrete (ACI Committee 228 1998). The half-cell potential method can be used to identify regions in which there is a high probability that corrosion is occurring at the time of the measurement. The linear-polarization method determines the instantaneous corrosion rate of the reinforcement located below the test point. Both methods require a connection to the embedded reinforcement, and the reinforcement must be electrically connected. The techniques are not applicable to epoxy-coated reinforcement and require experienced personnel to test and interpret the measurements.

OTHER PRACTICES

Forty-five percent of the respondents to the survey for this synthesis reported that they inspected drain holes for debris. Seventeen percent did not inspect drain holes and 38% reported that inspection of drain holes was not applicable.

Macioce et al. (2007) have summarized key inspection factors as follows:

- Document exposed strands
- Document cracking patterns
- Document areas of exposed concrete
- Identify areas of delaminated concrete by sounding
- Document visible rust stains
- Define strand corrosion
- Evaluate barrier and barrier connections
- Clear clogged drain holes
- Check for evidence of tie rod failure
- Examine wearing course for longitudinal cracks

Most clogged drain holes were cleaned by rodding out the debris in various ways.

Illinois DOT now requires that all loose and delaminated concrete be removed from the underside of precast, prestressed concrete deck beam bridges during inspection. This requirement enhances the accuracy of bridge inspections and reduces the rate at which the prestressing strands corrode by reducing the presence of trapped moisture adjacent to the strands (Modeer and Anderson 2005).

CHAPTER SIX

RESEARCH

MATERIALS RESEARCH

Gulyas et al. (1995) conducted laboratory tests to compare component material tests and composite grouted keyway specimen tests using nonshrink grouts and magnesium-ammonium-phosphate mortars. Comparative composite specimens were tested in vertical shear, longitudinal shear, and direct tension. Results indicated significant differences in performance between materials. Composite testing of grouted keyway assemblies rather than component materials testing was shown to be a more accurate way to evaluate the performance of a grouting material, because the effects of grouting materials, keyway shapes, curing, substrate exposure, and texture can be evaluated. Composite assemblies made with magnesium-ammonium-phosphate mortars provided much higher vertical shear, horizontal shear, and direct tensile tests than assemblies made with nonshrink grouts. The use of a keyway surface that was sandblasted before grouting the keyway with magnesium-ammonium-phosphate mortars provided higher strengths than a keyway surface that was allowed to carbonate.

Based on test results, Gulyas et al. (1995) recommended that consideration be given to grouting materials that have inherent bond strength to the keyway surface. Grout materials should have low shrinkage as measured using ASTM C157, all keyway surfaces should be provided with an aggressive grit-blasted surface at the plant immediately before shipment, and the use of nonshrink grouts for keyway applications should be discouraged unless the proposed material meets specific criteria for bond strength, drying shrinkage, chloride absorption, and shear strength. (Note, however, that the authors of the paper are employees of the company that sells the magnesium-ammonia-phosphate mortars used in the tests.)

Issa et al. (2003) reported an evaluation of the performance of four different grout materials for use in precast concrete deck systems. Thirty-six full-scale specimens were tested for vertical shear, direct tension, or flexural capacity. The precast slab joint surfaces were sandblasted until the coarse aggregate was slightly exposed followed by air and high-pressure water washing. Polymer concrete was found to be the best material for transverse joints in terms of strength, bond, and mode of failure. However, Issa et al. (2003) recommended the use of proprietary products containing magnesium-ammonium-phosphate mortars because of their ease of use and satisfactory performance. In cases in which the joint is subject to excessive stresses or a quick resumption of traffic is critical, polymer concrete was recommended.

STRUCTURAL RESEARCH

Shahawy (1990) conducted punching shear tests on a half-scale model of a prestressed concrete double-tee bridge system. The model consisted of three adjacent double-tee beams that were post-tensioned together transversely through their top flange. Initially, the double tees were post-tensioned to a value of 75 psi at the middle portion of the span and to 150 psi at the 3-ft-long end regions. After two initial punching tests were performed, it was concluded that the amount of transverse post-tensioning was insufficient to achieve monolithic behavior of the bridge slab. Therefore, the value was increased to 150 psi at the middle portion and 300 psi at the ends.

Based on seven tests, Shahawy (1990) concluded that an average effective post-tensioning of 150 psi across the longitudinal joint resulted in monolithic behavior and produced punching shear resistance similar to that of cast-in-place concrete slabs in multibeam bridges. He also concluded that the 150 psi effective prestress seemed to ensure adequate fatigue life of the longitudinal joints.

Huckelbridge et al. (1995) and Huckelbridge and El-Esnawi (1997) investigated the performance of grouted shear keys located at the longitudinal joints between adjacent beams of multibeam prestressed concrete box beams. The test specimens consisted of a 12-in. longitudinal slice of a three-beam-wide assembly with a loaded center beam. Transverse ties were not included. All the test specimens exhibited relative displacements across some of the joints, which indicated a fractured shear key. The study proposed to locate the 6-in.-deep shear key at the neutral axis level of the cross section rather than starting 6 in. below the top of the beam. The static shear load capacity of the new shear-key design was 2.4 times that of the previous shear-key design with nonshrink grout in the keyways. The fatigue life of the new shear-key design was extended to more than 8,000,000 cycles from about 100 cycles with the previous key design.

Hlavacs et al. (1997) used a full-scale portion of an adjacent box beam bridge to test the performance of grouted shear keys under environmental and cyclic loads. Two separate tests were conducted. In the first, shear keys that were grouted in late autumn cracked soon after casting, before any load had been applied. Data from instruments embedded in the beams and shear keys showed large discontinuities in strains caused by freezing temperatures. These strains were much larger than strains that occurred under loads corresponding to the weight of an HS20-44 truck. The beams were subjected to 41,000 cycles of loading that simulated HS20-44 wheel loads. No new cracking occurred from the loading, but cracks caused by temperature propagated under these loads. In the second test, the keys were grouted in the summer. Higher temperatures caused by the sun's heat on the top of the beams again caused large thermal strains, which cracked the shear keys. These keys were subjected to 1,000,000 cycles of load corresponding to an HS20-44 wheel load. As in the first test, the load itself did not cause new cracks, but the existing thermal cracks propagated under the load.

Miller et al. (1999) conducted outdoor full-scale testing of shear keys using four-beam-wide full-scale assemblies, 33 in. deep and 75 ft long. Three different shear-key configurations were studied:

- Configuration 1: A current detail in which the shear key is approximately 10 in. deep from the top of the beam and grouted with nonshrink grout
- Configuration 2: The same keyway used in the first configuration but grouted with epoxy
- Configuration 3: A proposed mid-depth keyway grouted with nonshrink grout

Five transverse tie rods were provided as required by the Ohio DOT specifications. The tie rods were tightened with a torque wrench before casting the shear keys to pull the beams together.

The test results showed that the currently used shear-key design cracks because of thermal stresses that are generated as the beams deflect up and down during daily heating and cooling cycles. The mid-depth keyway was less susceptible to these stresses and was more resistant to cracking. The epoxied shear key did not crack. Miller et al. (1999), however, expressed concerns about thermal compatibility between the epoxy and the concrete.

Load tests on the assemblies showed that cracked shear keys still transfer load, but dye penetration tests showed that they would leak. Thus, the authors concluded that the main problem associated with shear-key cracking appears to be leakage rather than structural load transfer.

Grace and Jenson (2008) performed an experimental and analytical study to examine the influence of the level of transverse post-tensioning and the number of transverse diaphragms on the performance of a bridge in the transverse direction. The experimental program included the construction, instrumentation, and testing of a one-half scale, 30-degree skew adjacent box beam bridge model with an effective span of 31 ft. The model consisted of four adjacent box beams with full-depth shear keys, reinforced composite deck slab, and unbonded carbon fiber reinforced polymer (CFRP) transverse post-tensioning.

Testing of the model consisted of load distribution tests with an uncracked, cracked, and repaired deck slab. The distribution of the transverse strain that developed at the top surface of the deck slab and the deflection across the width of the bridge were examined for different numbers of transverse diaphragms and different levels of transverse post-tensioning force. The results indicated that increasing the transverse post-tensioning force improved the transverse load distribution and that five diaphragms were better than three in terms of load distribution.

The analytical study included finite element analyses to simulate a wide range of bridges with different span lengths and widths. Different loading cases were evaluated to establish an adequate number of diaphragms and appropriate transverse post-tensioning forces to prevent longitudinal cracks.

The Grace and Jenson study (2008) showed that live load alone is not the major cause of the longitudinal cracks. Combining temperature gradient with live load can lead to the development of longitudinal cracks between adjacent beams. The required number of diaphragms was found to be a function of the span length, whereas the required transverse post-tensioning force was a function of the bridge width. For 48-in.-wide box beams and span lengths up to 50 ft, the authors recommended a minimum of five diaphragms. Beyond 50 ft, the minimum number of diaphragms recommended increased to nine at a span length of 110 ft. For 36-in.-wide box beams, the recommended minimum number of diaphragms increased from five for span lengths up to 50 ft to eight for span lengths of 80 ft. The appropriate post-tensioning force ranged from 120 kips/diaphragm for a 24-ft-wide bridge to 160 kips/diaphragm for a 78-ft-wide bridge that was defined as having a recently constructed slab. These forces are equivalent to 10 to 16 kips/ft. When the recommendation for more diaphragms as the bridge span increases is combined with a fixed force per diaphragm, the total transverse post-tensioning force increases as the span length increases.

CHAPTER SEVEN

CONCLUSIONS AND SUGGESTIONS FOR FUTURE RESEARCH

CONCLUSIONS

Bridges built with adjacent precast, prestressed concrete box beams are used in about two-thirds of the states. The bridges are economical, can be constructed quickly, and eliminate most deck forming. Based on the survey conducted for this synthesis, the current practice for box beam bridges is as follows:

- Approximately half the states with box beam bridges use AASHTO/PCI cross-sectional shapes.
- Span lengths range from fewer than 20 ft to more than 80 ft.
- The most common maximum skew angle between the abutment and the perpendicular to the bridge centerline is 30 degrees.
- Most states use simple spans with a cast-in-place concrete deck.
- Where a composite deck is used for continuous spans, the bridges are generally designed to be continuous for live load.
- Most longitudinal keyways between adjacent box beams are partial depth.
- The most common transverse tie consists of unbonded post-tensioned strands or bars.
- Approximately half the states grout the keyway before post-tensioning and approximately half after post-tensioning.
- There is no consensus about the number of transverse ties and the magnitude of post-tensioning force.
- Exterior and interior beams generally use the same design.
- Most bridges have either full-width support or two-point supports on each end.
- More states use plain elastomeric bearings rather than laminated elastomeric bearings.
- In single-stage construction, all beams are generally connected transversely at one time.
- In two-stage construction, a variety of sequences is used.
- Approximately half the states require sandblasting of the keyway before erection. The sandblasting is always done before shipment.
- The most common grout used for the keyways is a non-shrink grout.
- Approximately half the states require the use of wet curing or curing compounds for the grout.

Although box beam bridges have generally performed well, design and construction practices have changed over the years as experience with the use of box beams has grown. Nevertheless, a recurring problem with this type of construction is cracking in the grouted longitudinal joints between adjacent beams. This cracking appears to be initiated by stresses associated with temperature gradients, and then propagates as a result of live load, or it is caused by a combination of stresses from temperature gradients and live load. In bridges with partial-depth keyways, the cracking may be initiated by tensile stresses caused by the post-tensioning. Once the cracking has occurred, chloride-laden water can penetrate the cracks and saturate the sides of the beams. Eventually, this can lead to corrosion of the non-prestressed reinforcement, prestressing strands, and transverse ties.

From a structural aspect, cracking at the keyway can lead to a reduction in the bending moment or vertical shear transferred across the joint. Therefore, the live-load distribution may not occur as assumed in design, and individual beams could be overloaded. This overloading can cause one beam to deflect more than the adjacent beams, which can lead to further deterioration of the joint.

Useful Practices

Based on information received from the survey and literature review, the following practices can eliminate or reduce the likelihood of longitudinal cracking and joint deterioration and, therefore, enhance the performance of adjacent box beam bridges:

- Design Practices
  - Using full-depth shear keys that can be grouted easily
  - Using transverse post-tensioning so that tensile stresses do not occur across the joint
  - Using a cast-in-place, reinforced concrete, composite deck with a specified concrete compressive strength of 4,000 psi and minimum thickness of 5 in., to limit the potential for longitudinal deck cracking

- Construction Practices
  - Using stay-in-place expanded polystyrene to form the voids
  - Sandblasting the longitudinal keyway surfaces of the box beams immediately before shipping to provide a better bonding surface for the grout
  - Cleaning the keyway surfaces with compressed air or water before erection of the beams to provide a better bonding surface for the grout
  - Grouting the keyways before transversely post-tensioning to ensure compression in the grout
  - Using a grout that provides a high bond strength to the box beam keyway surfaces to limit cracking
  - Providing proper curing for the grout to reduce shrinkage stresses and ensure proper strength development
  - Wet curing of the concrete deck for at least 7 days to reduce the potential for shrinkage cracking and to provide a durable surface

- Maintenance Practices
  - Sealing longitudinal cracks as soon as they occur to prevent salt and water penetration
  - Washing the decks on an annual basis to remove chlorides
  - Cleaning drain holes on a regular basis to prevent water accumulation in the boxes

Practices to Avoid

The following practices were identified as ones to avoid:

- Design Practices
  - Using nontensioned transverse ties because they do not prevent cracking

- Construction Practices
  - Using an asphalt wearing surface unless a waterproofing membrane is used because water accumulates below the asphalt
  - Using nonprepackaged products for grout in the keyways

SUGGESTIONS FOR FUTURE RESEARCH

Responses to the survey for this synthesis provided the following topics for future research and development programs.

Design

Design guidelines could be developed for the connection between adjacent box beams to prevent longitudinal cracks, reflective cracks, and subsequent leaks. Items to be evaluated include the number and location (vertically and horizontally) of transverse ties, sequence to connect adjacent beams, magnitude of the post-tensioning, optimum keyway configuration, and types of grout. A research problem statement addressing this topic is included in Appendix D.

Durability

Methods could be identified to improve the long-term durability of adjacent box beam bridges, including the use of stainless steel stirrups, corrosion protection of the tie rods, waterproofing membranes that can accommodate differential deflection of beams, and long-term maintenance procedures.

Repair

Practical methods could be developed to replace interior beams, restore load sharing between beams, repair deteriorated or damaged box beams, and install transverse ties under staged construction.

REFERENCES

AASHTO, *Standard Specifications for Highway Bridges*, 17th ed., American Association of State Highway and Transportation Officials, Washington, D.C., 2002.

AASHTO, *AASHTO LRFD Bridge Design Specifications*, 4th ed. (plus 2008 Interim Revisions), American Association of State Highway and Transportation Officials, Washington, D.C., 2007.

ACI Committee 222, "Protection of Metals in Concrete Against Corrosion," ACI 222R-01, American Concrete Institute, Farmington Hills, Mich., 2001.

ACI Committee 228, "Nondestructive Test Methods for Evaluation of Concrete in Structures," ACI 228.2R-98, American Concrete Institute, Farmington Hills, Mich., 1998.

Ahlborn, T.M., C.G. Gilbertson, H. Aktan, and U. Attanayake, "Condition Assessment and Methods of Abatement of Prestressed Concrete Box-Beam Deterioration," Research Report RC-1470, Michigan Technological University, Houghton, 2005.

Anderson, R.E., "New PPG Deck Beam Designs and Details on State System," Memorandum 07.2, Illinois Department of Transportation, Springfield, Aug. 29, 2007.

Attanayake, U. and H. Aktan, "Issues with Reflective Deck Cracks in Side-by-Side Box Beam Bridges," *NCBC Concrete Bridge Conference, Proceedings*, St. Louis, Mo., May 3–5, 2008.

Badwan, I. and R. Y. Liang, "Transverse Post-tensioning Design of Precast Concrete Multibeam Deck," *PCI Journal*, Vol. 52, No. 4, July–Aug. 2007, pp. 84–92.

Dong, H., L. Yue, and T.M. Ahlborn, "Performance of Joint Connections between Decked Prestressed Concrete Bridge Girders," *PCI National Bridge Conference, Proceedings*, Phoenix, Ariz., Oct. 22–24, 2007.

El-Remaily, A., M.K. Tadros, T. Yamane, and G. Krause, "Transverse Design of Adjacent Prestressed Concrete Box Girder Bridges," *PCI Journal*, Vol. 41, No. 4, July–Aug. 1996, pp. 96–107.

Grace, N.F. and E. Jenson, "Use of Unbonded CFCC for Transverse Post-Tensioning of Side-by-Side Box-Beam Bridges," Research Report RC-1509, Lawrence Technological University, Southfield, Mich., 2008.

Greuel A., T.M. Baseheart, B.T. Rogers, R.A. Miller, and B. Shahrooz, "Evaluation of a High Performance Concrete Box Girder Bridge," *PCI Journal*, Vol. 45, No. 6, Nov.–Dec.2000, pp. 60–71.

Gulyas, R.J., G.J. Wirthlin, and J.T. Champa, "Evaluation of Keyway Grout Test Methods for Precast Concrete Bridges," *PCI Journal*, Vol. 40, No. 1, Jan.–Feb. 1995, pp. 44–57.

Hanna, K.E., G. Morcous, and M.K. Tadros, "Non-Post-Tensioned Transverse Design and Detailing of Adjacent Box Beam Bridges," *NCBC Concrete Bridge Conference, Proceedings*, St. Louis, Mo., May 5–7, 2008.

Hanna, K.E., G. Morcous, and M. K. Tadros, "Transverse Design and Detailing of Adjacent Box Beam Bridges," *PCI National Bridge Conference, Proceedings*, Phoenix, Ariz., Oct. 22–24, 2007.

Harries K.A., "Full-scale Testing Program on De-commissioned Girders from the Lake View Drive Bridge," Report No. FHWA-PA-2006-008-EMG001, Pennsylvania Department of Transportation, Harrisburg, 2006.

Hawkins, N.M. and J.B. Fuentes, "Structural Condition Assessment and Service Load Performance of Deteriorated Pretensioning Deck Beam Bridges," Civil Engineering Studies, Transportation Engineering Services, No. 124. Illinois Cooperative Highway and Transportation Series No. 285, Report No. FHWA-IL-UI-285, 2003.

Hlavacs, G.M., T. Long, R.A. Miller, and T.M. Baseheart, "Nondestructive Determination of Response of Shear Keys to Environmental and Structural Cyclic Loading," *Transportation Research Record 1574*, Transportation Research Board, National Research Council, Washington, D.C., 1997, pp. 18–24.

Huckelbridge A.A. and H.H. El-Esnawi, "Evaluation of Improved Shear-Key Designs for Multi-Beam Box Girder Bridges," Final Report No. FHWA/OH/97-009, Department of Civil Engineering, Case Western Reserve University, Cleveland, Ohio, 1997.

Huckelbridge, A.A., H.H. El-Esnawi, and F. Moses, "Shear Key Performance in Multibeam Box Girder Bridges," *Journal of Performance of Constructed Facilities*, Vol. 9, No. 4, Nov. 1995, pp. 271–285.

Illinois DOT, "Concrete Deck Beams," *Guide Bridge Special Provisions* (GBSP), No. 62, Illinois Department of Transportation, Springfield, June 13, 2008.

Iqbal, M.A., "Davis Narrows Bridge in Brooksville, Maine: Fast Track Solution to an Environmentally Sensitive and Tourist Location," *PCI National Bridge Conference, Proceedings*, Grapevine, Tex., Oct. 23–25, 2006.

Issa, M.A., C.L. Ribeiro do Valle, H.A. Abdalla, and S. Islam, "Performance of Transverse Joint Grout Materials in Full-Depth Precast Concrete Bridge Deck Systems," *PCI Journal*, Vol. 48, No. 4, July–Aug. 2003, pp. 92–103.

Lall, J., E.F. DiCocco, and S. Alampalli, *Full-Depth Shear-Key Performance in Adjacent Prestressed-Beam Bridges*, Special Report No. 124, Transportation Research and Development Bureau, New York State Department of Transportation, Albany, 1997.

Lall, J., S. Alampalli, and E.F. DiCocco, "Performance of Full Depth Shear Keys in Adjacent Prestressed Box Beam Bridges," *PCI Journal*, Vol. 43, No. 2, March–April 1998, pp. 72–79.

Macioce, T.P., H.C. Rogers, R. Anderson, and D.C. Puzey, "Prestressed Concrete Box Beam Bridges—Two DOTs' Experience," *PCI National Concrete Bridge Conference, Proceedings*, Phoenix, Ariz., Oct. 22–24, 2007.

Miller, R.A., G.M. Hlavacs, T. Long, and A. Greuel, "Full-Scale Testing of Shear Keys for Adjacent Box Girder Bridges," *PCI Journal*, Vol. 44, No. 6, Nov.–Dec. 1999, pp. 80–90.

Miller, R.A., K. Parekh, and J.T. Halsey, *Destructive Load Testing of a Damaged and Deteriorated Prestressed Concrete Box Beam*, Report No. UC-CII 93/03, Cincinnati Infrastructure Institute, University of Cincinnati, Ohio, 1995.

Modeer, V.A. and R.E. Anderson, "Damage Inspections and Monitoring for Deteriorated Precast Prestressed Concrete Deck Beam Bridges," Memorandum, Illinois Department of Transportation Springfield, 2005.

Naito, C., R. Sause, I. Hodgson, S. Pessiki, and C. Desai, "Forensic Evaluation of Prestressed Box Beams from the Lake View Drive Bridge over I-70," Final Report, ATLSS Report No. 06-13. Lehigh University, Bethlehem, Pa., 2006.

Needham, D. and D. A. Juntunen, "Investigation of Condition of Prestressed Concrete Bridges in Michigan," Research Report R-1348, Michigan Department of Transportation, Lansing, 1997.

Nottingham, D., Discussion of "Evaluation of Keyway Grout Test Methods for Precast Concrete Bridges," by R.J. Gulyas, G.J. Wirthlin, and J.T. Champa, *PCI Journal*, Vol. 40, No. 4, July–Aug. 1995, pp. 98–103.

PCI, *PCI Bridge Design Manual*, Precast/Prestressed Concrete Institute, Chicago, Ill., 1997 (updated July 2004).

PCI, *The State-of-the-Art of Precast, Prestressed Adjacent Member Bridges*, Precast/Prestressed Concrete Institute, Chicago, Forthcoming, expected in 2009.

Ralls, M.L., B. Tang, S. Bhidé, B. Brecto, E. Calvert, H. Capers, D. Dorgan, E. Matsumoto, C. Napier, W. Nickas, and H.G. Russell, *Prefabricated Bridge Elements and Systems in Japan and Europe*, Report No. FHWA-PL-05-003, Federal Highway Administration, Washington, D.C., 2005.

Rao, C. and G.C. Frantz, "Fatigue Tests of 27-Year-Old Prestressed Concrete Bridge Box Beams," *PCI Journal*, Vol. 41, No. 5, Sep.–Oct. 1996, pp. 74–83.

Shahawy, M.E., "Feasibility Study of Transversely Prestressed Double Tee Bridges," *PCI Journal*, Vol. 35, No. 5, Sep.–Oct. 1990, pp. 56–69.

Shenoy, C.V. and G.C. Frantz, "Structural Tests of 27-Year-Old Prestressed Concrete Bridge Beams," *PCI Journal*, Vol. 36, No. 5, Sep.–Oct. 1991, pp. 80–90.

Whiting, D. and B.G. Stejskal, "Field Studies of Corrosion in Prestressed Concrete Bridges," *In Philip D. Cady International Symposium on Concrete Bridges in Aggressive Environments*, ACI SP-151, ed. R.E. Weyers, American Concrete Institute, Farmington Hills, Mich., 1994, pp. 73–93.

Yamane, T., M.K. Tadros, and P. Arumugasaamy, "Short to Medium Span Precast Prestressed Concrete Bridges in Japan," *PCI Journal*, Vol. 39, No. 2, March–April 1994, pp. 74–100.

APPENDIX A

SURVEY QUESTIONNAIRE

The following survey for this synthesis was mailed in February and March 2008 to 50 state highway agencies, the District of Columbia, six railroads, and the National Association of County Engineers in the United States, and 13 provincial highway agencies in Canada to collect information about box beam bridges and their connection details. A total of 58 responses were received including 21 from owners that do not use adjacent box beam bridges.

National Cooperative Highway Research Program
Synthesis of Highway Practice
Topic 39-10

ADJACENT PRECAST BOX BEAM BRIDGES: CONNECTION DETAILS

QUESTIONNAIRE

PURPOSE OF THE SYNTHESIS

Bridges constructed using concrete box beams have been in service for many years and have generally performed well. However, a recurring problem is cracking in the grouted joints between adjacent units, resulting in reflective cracks forming in the wearing surface. In most cases, the cracking leads to leakage, which allows chloride-laden water to saturate the sides and bottom of the beams, eventually causing corrosion of the non-prestressed and prestressed reinforcement. In severe cases, the joints crack completely and load transfer is lost. There is no design method for shear keys in the AASHTO Standard Specifications for Highway Bridges or the AASHTO LRFD Bridge Design Specifications. Most shear key details in use are regional “standard details” of uncertain origin, and there is no information on the magnitude of forces induced in the shear keys and the ability of a given detail to resist these forces.

The purpose of the synthesis is to document the different types of grout key configurations, grouts, and transverse tie systems that are currently being used in the United States and Canada, and how each type has performed.

OBJECTIVE OF THIS QUESTIONNAIRE

The objective of the questionnaire is to obtain information on the following topics:

- Best practices and details that have proven to enhance the performance of precast concrete box beam bridges
- Practices and details to avoid
- Impact of the following:
    - Span range
    - Bridge skew
    - Bearing types

  - Topped and non-topped beams
  - Phased construction
  - Waterproofing membranes
  - Exterior beam details, including connections to the barrier
- Grout specifications
- Inspection practices
- Means being used to maintain these bridge types, including rehabilitation and retrofitting techniques
- Sources of ongoing or completed analytical and/or experimental research pertaining to the design or construction of this type of bridge
- Design and/or construction issues that require further research and evaluation

INSTRUCTIONS

This questionnaire is divided into four main sections covering structural design and details; specifications and construction practices; long-term performance, maintenance, repairs, and inspection practices; and research. Consequently, it may be necessary to have different sections completed by different people in your organization. For each section of the questionnaire, please be sure to provide contact information in case follow-up interviews are necessary to clarify the response. We prefer that you complete the questionnaire electronically and email your response but will accept fax or mailed hard copy.

PLEASE RETURN THE COMPLETED QUESTIONNAIRE BY MARCH 7, 2008.

To: Henry G. Russell,
Henry G. Russell, Inc.
720 Coronet Rd
Glenview, IL 60025-4457

Phone: 847-998-9137
Fax: 847-998-0292
E-mail: henry@hgrconcrete.com

Please contact Henry Russell with any questions.

THANK YOU FOR YOUR HELP WITH THIS PROJECT.

SECTION A—RESPONDING AGENCY INFORMATION

A1. Please complete the following request for information to aid in processing this questionnaire:

Agency/Organization: ____

Address: ____

City: ___________________________ State/Province: _______ Zip: _____

Primary Person Completing Questionnaire: ____________________________

Current Position/Title: ____________________

Date: ____________________________ E-mail: ___________________

Phone: ___________________________ Fax: ______________________

Agency Contact (if different from above): ________________________

Phone: ____________________________ E-mail: ___________________

A2. Does your organization design or build adjacent box beam bridges?

☐ Yes ☐ No

If Yes, please go to Section B.

If No, please provide your reasons for not using them and your questionnaire is complete.

____

____

Section A completed by: __________________

E-mail: _________________________________

Phone: _________________________________

Fax: ___________________________________

SECTION B—STRUCTURAL DESIGN AND DETAILS

B1. If available, please provide the website address for information on standard cross sections and details. If not available, please provide electronic or hard copy.

____

____

B2. What are the span lengths of your adjacent box beam bridges? (Check all that apply.)

☐ 0 or 20 ft ☐ 20.1 to 40 ft ☐ 40.1 to 60 ft ☐ 60.1 to 80 ft
☐ >80 ft

B3. What is the maximum skew angle used?

☐ 0° ☐ 10° ☐ 20° ☐ 30° ☐ 40° ☐ 50° ☐ 60° ☐ Other

If Other, please describe: ____

____

B4. What shape of box beams do you use?

☐ AASHTO/PCI ☐ State Standard ☐ Other _________

B5. What type of superstructure do you build? (Check all that apply.)

☐ Simple spans with no cast-in-place concrete or bituminous wearing surface
☐ Simple spans with cast-in-place concrete wearing surface
☐ Simple spans with bituminous wearing surface only
☐ Simple spans with waterproofing membrane and bituminous wearing surface
☐ Continuous spans with composite cast-in-place concrete wearing surface
☐ Integral abutments with no cast-in-place concrete or bituminous wearing surface
☐ Integral abutments with composite cast-in-place concrete wearing surface
☐ Other. Please describe: ____

____

If a composite cast-in-place concrete wearing surface is used, what is the specified minimum thickness: _____in.

B6. If you build continuous spans with cast-in-place concrete topping, do you design to be continuous for live loads?

☐ Not applicable ☐ Yes ☐ No

B7. What are your design criteria, if any, for the connections between adjacent box beams?

____

____

B8. What is the depth of the keyway?

☐ Full ☐ Partial ☐ Other, please describe: ____________________________________

____

B9. Are any design calculations made to determine the amount of transverse ties between box beams?

☐ Yes ☐ No

If Yes, please describe: ____

____

B10. What types of transverse ties between the box beams are specified?

☐ Transverse unbonded post-tensioning strands
☐ Transverse unbonded post-tensioning bars
☐ Non-prestressed unbonded reinforcement
☐ Transverse bonded post-tensioning strands
☐ Transverse bonded post-tensioning bars
☐ Non-prestressed bonded reinforcement

If bonded, what type of grout is used? ____

____

If post-tensioned strands or bars are used, what is the post-tensioning force?

____

____

B11. What quantity of transverse ties between box beams is specified?

____

____

B12. What is the vertical location of the transverse ties?
☐ Mid-depth ☐ Other

If Other, please describe: ____

____

B13. What are the spacings or locations of the transverse ties along the length of the box beams?

____

____

B14. What sequence is used to connect the beams transversely in single-stage construction?

☐ First beam to second beam, second beam to third beams, etc.
☐ All beams at one time
☐ Other, please describe: ______________________________
____

B15. What sequence is used to connect the beams transversely in two-stage construction?

Please describe: ______________________________
____

B16. Is the design of the exterior beams different from that of the interior beams?

☐ Yes ☐ No

If Yes, please describe: ______________________________
____

B17. Please provide details of the connection between the barrier or railing and the exterior beam if not included in your response to Question B1.

____
____

Section B completed by:____________________

E-mail:____________________

Phone:____________________

Fax:____________________

SECTION C—SPECIFICATIONS AND CONSTRUCTION PRACTICES

C1. If available, please provide the website address for your standard specifications and any special provisions for adjacent box beam bridges: ____

☐ If not available, please provide electronic or hard copy.

C2. Are there any limitations related to differential camber between adjacent beams?

☐ Yes ☐ No

If Yes, please describe: ____

____

C3. What corrective actions, if any, are used to remove excessive differential camber?

____

____

C4. Are keyways sandblasted before installation?

☐ Yes ☐ No

C5. If Yes, where is the sandblasting performed?

☐ Not applicable ☐ Before shipment ☐ On site before erection ☐ After erection

C6. Is any keyway preparation other than sandblasting performed?

For interior faces: ☐ Yes ☐ No
For exterior face of the edge beams: ☐ Yes ☐ No

If Yes, please describe: ____

____

C7. When are the keyways grouted?

☐ Before transversely post-tensioning, if used
☐ After transversely post-tensioning, if used
☐ Do not use transverse post-tensioning

C8. What type of material is used in the keyways?

☐ ASTM C 1107 ☐ Epoxy grout ☐ Mortar
☐ Concrete topping ☐ Other __________________________

Please provide your materials specification if not included in your response to Question C1.

C9. What method is used to place material in the keyways?

☐ Poured by hand ☐ Pumped ☐ Other

If Other, please describe: ____________________

____

C10. What method is used to cure the top surface of the material in the keyways?

☐ None ☐ Curing compound ☐ Wet cure
☐ Other. Please describe: ____________________

C 11. How many bearing supports are used at each end of the beams?

☐ 1-Full width support ☐ 2-Point support ☐ 2-Point support on one end and 1-Point support on the other
☐ Other. Please describe: ____________________

C12. What type of bridge bearings are used?

☐ Plain elastomeric ☐ Laminated elastomeric ☐ Other ____________________

C13. Have you experienced uneven seating of box beams?

☐ Yes ☐ No

If Yes, how was this corrected?____________________

____

C 14. If your organization currently uses waterproofing membranes on adjacent box beam bridges, please rate their performance at protecting the connection on a scale of 1 to 5 where 1 = excellent and 5 = poor.

[ ] None
[ ] Asphalt-impregnated fiber sheets
[ ] Polymer sheets
[ ] Elastomer sheets
[ ] Asphalt-laminated boards
[ ] Bituminous liquid
[ ] Resinous liquid
[ ] Other ____________________

C15. Do any of the following factors appear to impact the long-term performance of adjacent box-beams bridges?

Yes	No	
☐	☐	Span length
☐	☐	Simple spans vs. continuous span
☐	☐	Bridge skew
☐	☐	Bearing types
☐	☐	Topped vs. non-topped beams
☐	☐	Integral abutments vs. conventional abutments
☐	☐	Phased construction
☐	☐	Waterproofing membranes
☐	☐	Exterior beam details
☐	☐	Maintenance or lack thereof

For each Yes, please provide a brief description of the beneficial or detrimental impact:

____

____

____

____

____

____

____

____

____

____

Section C completed by:___________________

E-mail:________________________________

Phone:________________________________

Fax:__________________________________

SECTION D—LONG-TERM PERFORMANCE, MAINTENANCE, REPAIRS, AND INSPECTION PRACTICES

D1. What problems have you observed with joints between adjacent box beams? (Check all that apply.)

☐ None
☐ Longitudinal cracking along the grout-box beam interface
☐ Cracking within the grout
☐ Spalling of the grout
☐ Spalling of the corners of the boxes
☐ Differential vertical movement between adjacent beams
☐ Corrosion of the transverse ties
☐ Corrosion of the longitudinal prestressing strands
☐ Freeze-thaw damage to the grout
☐ Freeze-thaw damage to the concrete adjacent to the joint
☐ Water and salt leakage through the joint
☐ Other. Please describe: ____________________

____

D2. If a concrete topping is used, is there reflective cracking through the topping along the edge of the beams?

☐ Yes ☐ No ☐ Do not use concrete toppings

D3. What methods of construction have you found to be most effective in preventing deterioration along the joints?

____

____

D4. What methods of construction have you found to be least effective in preventing deterioration along the joints?

____

____

D5. What methods, if any, do you use to maintain adjacent box beam bridges?

____

____

D6. What methods, if any, have you used to rehabilitate or retrofit adjacent box beam bridges and were they effective?

____

____

D7. What methods of inspection are used for these bridges?

☐ Visual ☐ Non-destructive testing ☐ Other

If Non-destructive testing or Other, please describe: ____
____
____

D8. Are venting holes inspected for debris?

☐ Yes ☐ No ☐ Not applicable

If venting holes are clogged, how are they cleaned out? ____
____
____

Section D completed by:________________________

E-mail:________________________________

Phone:________________________________

Fax:________________________________

SECTION E—RESEARCH

E1. Please list any research recently completed or in progress by your organization related to the design, construction, repair, and/or maintenance of adjacent box beam bridges:

E2. Please list any design, construction, repair, and/or maintenance issues that require further research and evaluation:

Section E completed by:____________________

E-mail:____________________

Phone:____________________

Fax:____________________

APPENDIX B

SUMMARY OF RESPONSES TO SURVEY QUESTIONNAIRE

Responses to the survey were received from the following U.S. highway agencies, Canadian Provinces, railroads, counties, and producers.

States
Alaska
Arizona
Arkansas
California
Delaware
Florida
Hawaii
Idaho
Kansas
Maryland
Massachusetts
Michigan
Minnesota
Missouri
Montana
Nevada
New Hampshire
New Jersey
New Mexico
New York
North Carolina
North Dakota
Ohio
Oklahoma
Oregon
Pennsylvania
South Carolina
South Dakota
Tennessee
Texas
Utah
Virginia
Washington
Wisconsin
Wyoming

Canadian Provinces
British Columbia
New Brunswick
Newfoundland and Labrador
Ontario
Prince Edward Island

Railroads
Burlington Northern & Santa Fe
Canadian Pacific
Norfolk Southern

Counties
Rio Blanco, CO
Palm Beach, FL
Adams, IN
Allegany, MD
Hunterdon, NJ
Mercer , NJ
Stark, OH
Lewis, WA
Pierce, WA
Snohomish, WA
Grant, WI
Marathon, WI
St. Croix, WI

Producers
Standard Concrete Products, GA
EnCon Bridge, CO

Responses to the survey questionnaire are summarized in the tables and graphs on the following pages. For many questions, the responses are provided separately for states and total survey and presented as number of respondents as well as a percentage of the respondents. In some cases, the percentages total more than 100 because more than one answer was possible and some states use multiple practices.

SECTION A—RESPONDING AGENCY INFORMATION

A2. Does your organization design or build adjacent box beam bridges?

Yes
State
Arizona
California
Delaware
Idaho
Maryland
Massachusetts
Michigan
Missouri
New Hampshire
New Jersey
New Mexico
New York
North Carolina
Ohio
Oregon
Pennsylvania
Tennessee
Texas
Virginia
Wisconsin
Wyoming
Canada
British Columbia
Ontario
Prince Edward Island
Railroads
Burlington Northern & Santa Fe
Norfolk Southern
County
Adams, IN
Allegany, MD
Hunterdon, NJ
Mercer, NJ
Stark, OH
Marathon, WI
St. Croix, WI
Producer
Standard Concrete, CA
EnCon, CO

No
State
Alaska
Arkansas
Florida
Hawaii
Kansas
Minnesota
Montana
Nevada
North Dakota
Oklahoma
South Carolina
South Dakota
Utah
Washington
Canada
New Brunswick
Newfoundland
Railroad
Canadian Pacific
County
Rio Blanco, CO
Palm Beach, FL
Lewis, WA
Pierce, WA
Snohomish, WA
Grant, WI

SECTION B—STRUCTURAL DESIGN AND DETAILS

B1. If available, please provide the website address for information on standard cross sections and details. If not available, please provide electronic or hard copy.

State	Website Address
Idaho	www.itd.idaho.gov/bridge/manual/chapt5.htm for voided slab details.
Massachusetts	www.mhd.state.ma.us. At bottom of page: BRIDGE. At top left: BRIDGE MANUAL. Part 1, Sections 3.7 and 3.8 and Part 2 Chapter 4.
Michigan	http://mdotwas1.mdot.state.mi.us/public/design/englishbridgeguides
New Hampshire	www.nh.gov/dot/bureaus/highwaydesign/specifications/documents/Division500.pdf, under Section 528. Appendix B is no longer applicable.
New Jersey	www.state.nj.us/transportation/eng/documents/BDME/ Refer to Guide Plates 3.10-9 through 3.10-13.
New York	www.nysdot.gov/portal/page/portal/main/business-center/engineering/cadd-info/drawings/bridge-detail-sheets/pa-prestressed-concrete
North Carolina	www.ncdot.org/doh/preconstruct/highway/structur/strstandards/pdf/ See pcbb series
Ohio	www.dot.state.oh.us/se/standard/English%20STD/psbd207_10-19-07.pdf for drawings. www.dot.state.oh.us/se/standard/English%20STD/PSBDD207_10-19-07.pdf for data sheets. www.dot.state.oh.us/se/BDM/BDM2007/bdm2007.htm for Bridge Design Manual
Oregon	http://egov.oregon.gov/ODOT/HWY/BRIDGE/standards_manuals.shtml
Pennsylvania	http://www.dot.state.pa.us/Internet/BQADStandards.nsf/home?openFrameset
Texas	http://www.dot.state.tx.us/insdtdot/orgchart/cmd/cserve/standard/bridge-e.htm#boxBeams
Wisconsin	http://dotnet/dtid_bos/extranet/structures/bridge-manual/index.htm
British Columbia	www.th.gov.bc.ca/publications/eng_publications/bridge/bridge_standards.htm and click on Volume 3 - Standard Drawings

B2. What are the span lengths of your adjacent box beam bridges?

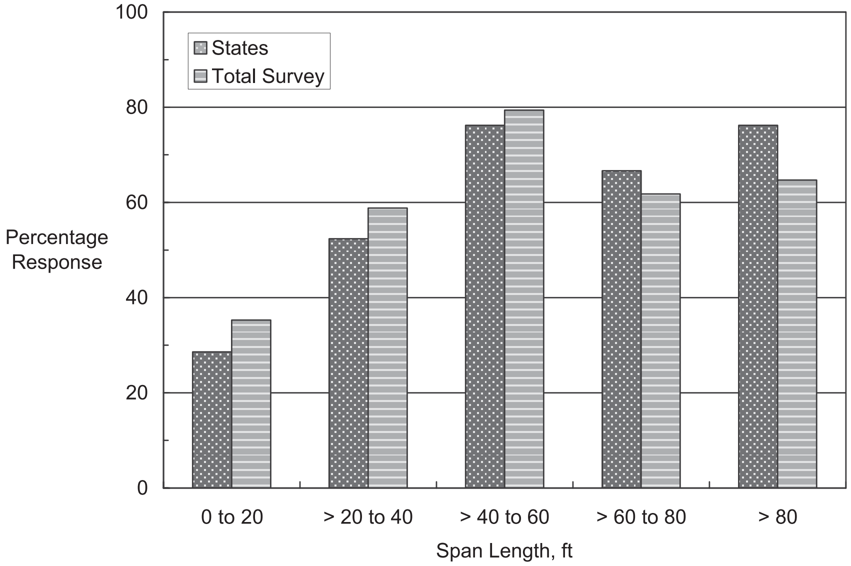

B3. What is the maximum skew angle used?

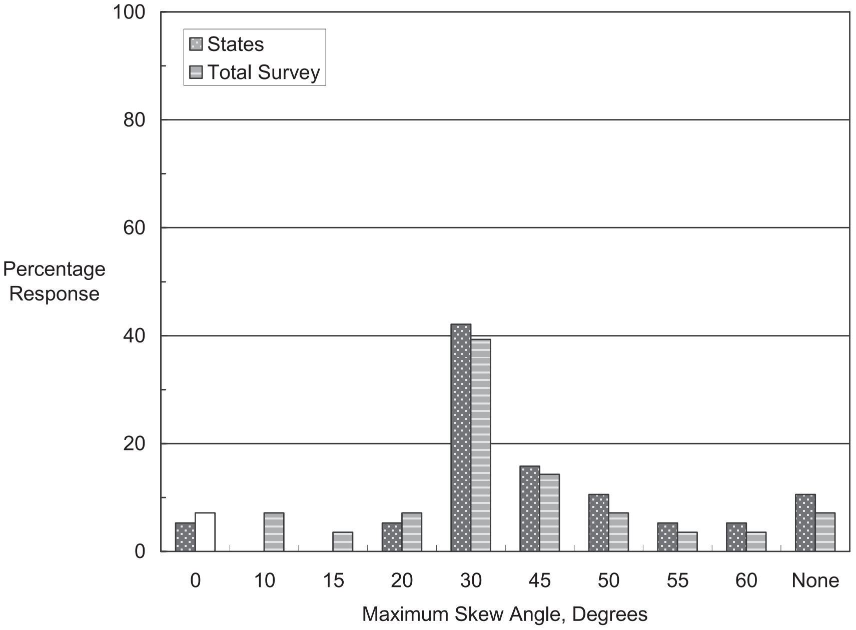

B4. What shape of box beams do you use?

Shape	States		Total Survey	
	No.	Percent	No.	Percent
AASHTO/PCI	10	50	15	54
State	6	30	9	32
Other[1]	4	20	4	14

[1] Other includes PCI Northeast, IDOT, and Canadian Precast/Prestressed Concrete Institute.

B5. What type of superstructure do you build?

a. Simple spans with no cast-in-place concrete or bituminous wearing surface
b. Simple spans with cast-in-place concrete wearing surface
c. Simple spans with bituminous wearing surface only
d. Simple spans with waterproofing membrane and bituminous wearing surface
e. Continuous spans with composite cast-in-place concrete wearing surface
f. Integral abutments with no cast-in-place concrete or bituminous wearing surface
g. Integral abutments with composite cast-in-place concrete wearing surface
h. Other

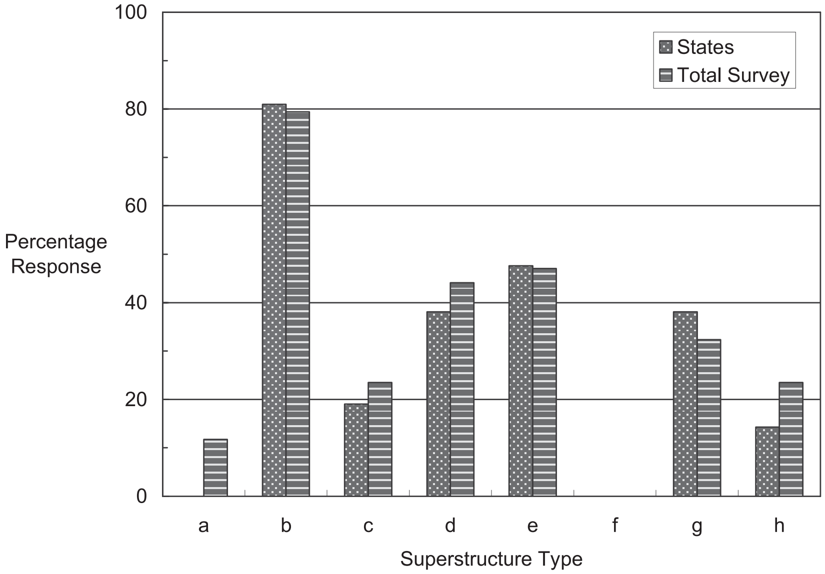

If a composite cast-in-place concrete wearing surface is used, what is the specified minimum thickness?

States	4.5 to 6 in.
Total Survey	3 to 9 in.

B6. If you build continuous spans with cast-in-place concrete topping, do you design to be continuous for live loads?

Answer	States		Total Survey	
	No.	Percent	No.	Percent
Not Applicable	7	33	13	39
Yes	11	52	15	45
No	3	14	5	15

B7. What are your design criteria, if any, for the connections between adjacent box beams?

Respondent	Description
States	
California	PCI Bridge Design Manual
Idaho	None
Maryland	None
Massachusetts	Prescriptive per the Bridge Manual
Michigan	Post-tensioned
Missouri	PCI Bridge Design Manual
New Hampshire	None
New Jersey	www.state.nj.us/transportation/eng/documents/BDME/ Section 25 of Bridge Design Manual
New Mexico	Post-tensioned rods at 25 ft centers along with full length keyways
New York	Standard connection details are used

Ohio	None
Oregon	None
Tennessee	None
Texas	Standard details with either CIP deck as the transverse tie or post-tensioning if asphalt overlay is used
Wisconsin	Not applicable
Wyoming	None
Canada	
British Columbia	Canadian Standards Association S6-06
Ontario	CIP topping to provide continuity.
Prince Edward Island	Based on load transfer to adjacent beams
Railroads	
Burlington Northern & Santa Fe	Not specified
Norfolk Southern	No connections for spans less than 40 ft
Counties	
Adams	
Allegany	Transverse rod or stranded cable
Hunterdon	Sufficient deck reinforcement to prevent deck cracking. Analyze for shear.
Stark	ODOT Standards
Marathon	WIDOT Standards
St. Croix	2.5 in. minimum grouted joint
Other	
Standard Concrete	One tie rod up to 40 ft spans and two tie rods up to 60 ft spans
EnCon	Untopped beams use shear keys with welded ties. All system bridges use 4 in. topping and a top mat of steel across the joint.

B8. What is the depth of the keyway?

Answer	States		Total Survey	
	No.	Percent	No.	Percent
Full	3	14	5	15
Partial	18	86	24	73
Other	1	5	2	6
None	0	0	3	9

B9. Are any design calculations made to determine the amount of transverse ties between box beams?

Answer	States		Total Survey	
	No.	Percent	No.	Percent
Yes	4	19	3	10
No	17	81	26	90

B10. What types of transverse ties between the box beams are specified?

a. Transverse unbonded post-tensioning strands
b. Transverse unbonded post-tensioning bars
c. Non-prestressed unbonded reinforcement
d. Transverse bonded post-tensioning strands
e. Transverse bonded post-tensioning bars
f. Non-prestressed bonded reinforcement

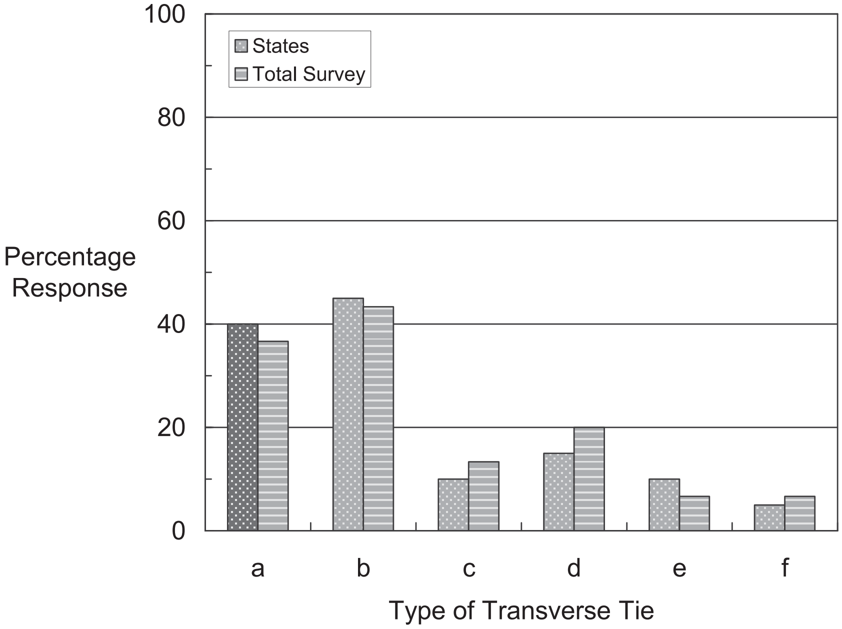

If post-tensioned strands or bars are used, what is the post-tensioning force?

Values ranged from 30 to 104 kips.

B11. What quantity of transverse ties between box beams is specified?

Respondent	Quantity of Ties
States	
Arizona	Two per span
California	Abutments and 1/3 span
Delaware	One or two
Idaho	One rod at midspan or third points
Maryland	Two ties at the third points
Massachusetts	Per Bridge Manual
Michigan	Varies per span. See design guides.
Missouri	One or two tie bars depending on span length
New Hampshire	Smaller skews have one strand. Larger skews have three strands.
New Jersey	Design Manual Guide Plate 3.10-13

New Mexico	Five tie rods per span
New York	Three for spans of less than 49.2 ft. Five for longer spans.
North Carolina	Three to five based on span length
Ohio	Depends on span length
Oregon	One rod spaced at 24 ft maximum
Pennsylvania	One tendon
Tennessee	Not applicable
Texas	10 ft maximum spacing
Virginia	Two tendons or bars per span
Wisconsin	Three 0.5-in. strands per duct
Canada	
British Columbia	10M at 200 mm (No. 3 at 8 in.)
Ontario	Not applicable
Prince Edward Island	Third points
Railroads	
Burlington Northern & Santa Fe	One at each end and two interior, usually at the one third points
Norfolk Southern	Varies with span length
Counties	
Adams	Determined by the manufacturer
Allegany	One to three depending on length
Hunterdon	Depends on skew and span length
Mercer	Two to five depending on span and skew
Stark	ODOT Standards
Marathon	WIDOT Standards
St. Croix	Three for 46 ft span at 21.25 ft centers
Other	
Standard Concrete	One or two
EnCon	Welded plates at 5 to 10 in. spacing

B12. What is the vertical location of the transverse ties?

Answer	States		Total Survey	
	No.	Percent	No.	Percent
Mid-Depth	12	63	21	68
Other	8	42	11	35

If Other, please describe:

Respondent	Comments
States	
Maryland	Close to mid-depth
Michigan	Varies by beam depth. See Design Guide 6.65.13.
New Hampshire	Mid-depth if topping is included. Otherwise one is high and one is low.
New Mexico	Two rods spaced 8 in. from top and bottom of box
North Carolina	Two strands vertically at third points
Ohio	6 in. for 12-in. deep box. 9 in for 17-, 21-, and 27-in. deep boxes and 14 in. for 33- and 42-in. deep boxes

Tennessee	Not applicable
Virginia	8 in. from the bottom
Texas	Middle of the shear key
Canada	
British Columbia	100 mm (4 in.) below top of box
Ontario	Not applicable
Railroads	
Norfolk Southern	One third points
Other	
EnCon	Recessed 2 to 3 in. from the top

B13. What are the spacings or locations of the transverse ties along the length of the box beams?

Respondent	Tie Spacing
States	
Arizona	Third points
California	PCI Bridge Design Manual
Delaware	Midspan and third points
Idaho	Midspan or third points
Maryland	Third points
Massachusetts	Span less than 50 ft: ends, and midspan. Spans over 50 ft: ends, midspan, and quarter points.
Michigan	Varies. See Design Guide.
Missouri	Generally near midspan or third points
New Hampshire	Span < 50 ft: at supports and midspan. Span > 50 ft: Supports, midspan, and quarter points.
New Jersey	See Bridge Design Manual Guide Plate 3.10-14.
New Mexico	15, 21.67, 21.67, 21.67, 21.67 ft
New York	Quarter points
North Carolina	Varies with span length
Ohio	Both ends and midspan for spans up to 50 ft, third points for 50 to 70-ft spans, and quarter points for spans over 75 ft
Oregon	24 ft maximum
Pennsylvania	Approximately three per span
Tennessee	Not applicable
Texas	10 ft maximum
Virginia	At third points
Wisconsin	End, quarter, and three quarter points and at 10 ft maximum spacing between quarter and three quarter points
Canada	
British Columbia	10M hooked ties at 200 mm (No. 3 at 8 in.) with 15M (No. 5) bar through the ties
Ontario	Not applicable
Prince Edward Island	Third points
Railroads	
Burlington Northern & Santa Fe	One at each end and two interior, usually at the one third points
Norfolk Southern	Generally quarter points
Counties	

Allegany	Midspan for one. Third or quarter points for others.
Hunterdon	Depends on skew and span length.
Mercer	One at each end and evenly spaced at about 25 ft
Stark	ODOT Standards
Marathon	Depends on span length
St. Croix	2 in. from the ends and at midspan
Other	
Standard Concrete	One tie rod up to 40 ft spans and two up to 60 ft spans

B14. What sequence is used to connect the beams transversely in single-stage construction?

a. First beam to second beam, second beam to third beams, etc.
b. All beams at one time
c. Other, please describe:

Sequence	States		Total Survey	
	No.	Percent	No.	Percent
a	8	42	12	39
b	14	74	24	77
c	0	0	0	0

For some states, Sequence b was used for bridges with zero or small skew angles. Otherwise, Sequence a was used. Another variation was a maximum of three beams with one tie rod.

B15. What sequence is used to connect the beams transversely in two-stage construction?

Respondent	Sequence
States	
Arizona	Connect two beams of the first stage to beams of the second stage.
California	Post-tension all boxes of first stage. On separate path, connect all beams (Stages 1 and 2).
Idaho	All beams at once if no skew. Otherwise, one to two, two to three, and so on.
Maryland	First stage at one time. Second stage at one time including one beam from first stage.
Massachusetts	First stage at one time. Second stage at one time including the first stage.
Missouri	First beam to second beam, etc.
New Hampshire	Have not done any.
New Jersey	Same as single stage - beam to beam with coupling devices
New Mexico	Not applicable
New York	One set of tendons for Stage 1 and another set for Stages 1 and 2
North Carolina	All beams at one time in Stage 1. All beams in both stages in Stage 2. Requires two sets of holes in Stage 1 beams.
Ohio	Beam to beam at phased construction line to connect both phases
Oregon	Grouting of first shear key opposite the second stage needs to wait until first box of the second stage is placed.
Pennsylvania	Post-tension all boxes of first stage. Then couple after Stage 2 to tie entire cross section together. See BC-775M.
Tennessee	Not applicable

Texas	Either spliced with couplers or separate post-tensioning for each phase.
Virginia	Beam to beam during both phases or all beams in the first phase and then all beams in both phases
Counties	
Allegany	Not applicable
Hunterdon	All beams at once for 0 to 15 degrees skew. Otherwise, first to second etc.
Mercer	First stage is post-tensioned. Additional ties are then placed through both stages and post tensioned.
Other	
Standard Concrete	First stage is connected. Second stage is connected to first beam in Stage 1.

B16. Is the design of the exterior beams different from that of the interior beams?

Answer	States		Total Survey	
	No.	Percent	No.	Percent
Yes	6	30	12	36
No	14	70	21	64

The main reasons given for using different design for the exterior beams were the dead load of the parapet, curb, railing, or sidewalk and the live load distribution.

B17. Please provide details of the connection between the barrier or railing and the exterior beam if not included in your response to Question B1.

See Appendix C.

SECTION C—SPECIFICATIONS AND CONSTRUCTION PRACTICES

C1. If available, please provide the website address for your standard specifications and any special provisions for adjacent box beam bridges.

Respondent	Website Address
States	
Maryland	www.marylandroads.com/businesswithsha/businesswithsha.asp?id=B157
Massachusetts	www.mhd.state.ma.us. Under Permits, Forms, and Publications, click on Manuals and then on Supplemental Specifications dated 6/6/2006.
Michigan	http://mdotwas1.mdot.state.mi.us/public/specbook/
New Hampshire	www.nh.gov/dot/bureaus/highwaydesign/specifications/documents/ Division 500.pdf under Section 528. Appendix B is no longer applicable.
New Jersey	www.nj.gov/transportation/eng/specs/2007/Division.shtml See Section 505 for construction criteria.
New York	www.nysdot.gov/portal/page/portal/main/business-center/engineering/specifications/2006-standard-specs
North Carolina	www.ncdot.org/doh/preconstruct/ps/specifications/english/web4a.pdf
Ohio	www.dot.state.oh.us/construction/OCA/Specs/2008CMS/500/515.htm
Pennsylvania	ftp://ftp.dot.state.pa.us/public/bureaus/design/pub408/pub%20408-2007.pdf
Texas	ftp://dot.state.tx.us/pub/txdot-info/des/specs/specbook.pdf
Virginia	http://virginiadot.org/business/resources/const/02bk.pdf and /02rv.pdf
Wisconsin	http://roadwaystandards.dot.wi.gov/standards/stndspec/part5.pdf. See SPV_PrestressedGirdersBox Type.doc
Canada	
British Columbia	http://www.th.gov.bc.ca/publications/const_maint/contract_serv/standard_specs/2006-Stand_Specs_Vol-1.pdf. Click on Section 415.

C2. Are there any limitations related to differential camber between adjacent beams?

Answer	States		Total Survey	
	No.	Percent	No.	Percent
Yes	7	33	11	32
No	14	67	23	68

Limitations included the following:
1/2 in. maximum
1/4 in. in 10 ft
3/4 in. maximum
1 in. between high and low in the same span
1 in. maximum

C3. What corrective actions, if any, are used to remove excessive differential camber?

Respondent	Corrective Actions for Excessive Differential Camber
States	
Arizona	Accommodate in deck thickness
California	1. Weigh down the high side, grout, and post tension. 2. Accommodate in deck thickness
Idaho	None
Maryland	Never had this problem
Massachusetts	None
Michigan	Preload to tolerance
New Hampshire	Barrier placed on high girder on one project
New Jersey	Application of dead load or concrete overlay
New Mexico	Weighting, fabrication scheduling or other approved method
New York	Camber is measured before shipping and bearing seat elevations adjusted accordingly.
North Carolina	Generally not a problem
Ohio	Up to contractor with state approval
Oregon	Patching if traffic drives directly on the bare deck
Pennsylvania	Only a concern for phased construction
Virginia	Asphalt overlay
Counties	
Adams	Adjusted finished profile grade
Allegany	Not required to date
Hunterdon	Producer makes a new beam.
Stark	Adjust in overlay
Other	
Standard Concrete	Preassemble span in yard to achieve best fit.
EnCon	Usually none

C4. Are keyways sandblasted before installation?

Answer	States		Total Survey	
	No.	Percent	No.	Percent
Yes	9	45	10	31
No	11	55	22	69

C5. If Yes, where is the sandblasting performed?

Answer	States		Total Survey	
	No.	Percent	No.	Percent
Not Applicable	11	55	22	69
Before Shipment	9	45	10	31
On Site Before Erection	0	0	0	0
After Erection	0	0	0	0

C6. Is any keyway preparation other than sandblasting performed?

Answer		States		Total Survey	
		No.	Percent	No.	Percent
Interior Face	Yes	8	40	11	32
	No	12	60	23	68
Exterior Face of Exterior Beam	Yes	2	11	4	13
	No	17	89	28	88

Keyway preparation techniques other than sandblasting included the following:
Clean and soak with water
Clean with compressed air and vacuum
Saturate keyway
Water blast
Application of a sealer
Chipping off excess concrete

C7. When are the keyways grouted?

Grouting Sequence	States		Total Survey	
	No.	Percent	No.	Percent
Before Post-Tensioning	9	47	12	48
After Post-Tensioning	10	53	13	52

C8. What type of material is used in the keyways?

Grouting Material	States		Total Survey	
	No.	Percent	No.	Percent
Non-Shrink Grout	9	43	13	43
Epoxy Grout	2	10	3	10
Mortar	5	24	8	27
Concrete Topping	3	14	4	13
Other	4	19	4	13

Non-shrink grouts were not always reported as conforming to ASTM C1107
Other grouts included:
Two-component polymer modified cementitious, fast-setting mortar
Cement-based grout
ASTM C881, Type IV, Grade 3

C9. What method is used to place material in the keyways?

Method	States		Total Survey	
	No.	Percent	No.	Percent
Poured by Hand	16	76	25	83
Pumped	2	10	2	7
Not Specified	4	19	4	13
Other	0	0	0	0

C10. What method is used to cure the top surface of the material in the keyways?

Method	States		Total Survey	
	No.	Percent	No.	Percent
None	8	40	12	43
Curing Compound	1	5	1	4
Wet Cure	9	45	13	46
Manufacturers' Recommendation	3	15	3	11
Other	0	0	0	0

C11. How many bearing supports are used at each end of the beams?

a. 1-Full width support
b. 2-Point support
c. 2-Point support on one end and 1-Point support on the other
d. Other.

Bearing Supports	States		Total Survey	
	No.	Percent	No.	Percent
a.	8	42	18	56
b.	8	42	12	38
c.	4	21	4	13
d.	1	5	1	3

The one other method consisted of partial width with preformed asphalt joint filler under the remaining area.

C12. What type of bridge bearings are used?

Bearing Type	States		Total Survey	
	No.	Percent	No.	Percent
Plain Elastomeric	15	71	26	76
Laminated Elastomeric	10	48	15	44
Other	0	0	0	0

C13. Have you experienced uneven seating of box beams?

Answer	States		Total Survey	
	No.	Percent	No.	Percent
Yes	10	50	16	48
No	10	50	17	52

Methods used to correct uneven seating included the following:
Steel shims
Grout layer or polymer-modified mortar below the bearing pad
Grinding

C14. If your organization currently uses waterproofing membranes on adjacent box beam bridges, please rate their performance at protecting the connection on a scale of 1 to 5 where 1 = excellent and 5 = poor.

a. None
b. Asphalt-impregnated fiber sheets
c. Polymer sheets
d. Elastomer sheets
e. Asphalt-laminated boards
f. Bituminous liquid
g. Resinous liquid
h. Other

Respondent	a.	b.	c.	d.	e.	f.	g.	h.	Comment
States									
California	X								
Idaho		3							
Maryland	X								
Massachusetts	5	5						1	5-in. thick reinforced topping
New Hampshire								1	Synthetic membrane impregnated with SBS modified bitumen
Ohio		4	3						
Oregon		4							
Pennsylvania	X								
Tennessee	X								
Canada									
Ontario	X								Hot applied rubberized asphaltic membrane.
Prince Edward Island				2		2			
Railroads									
Burlington Northern & Santa Fe	4								
Counties									
Allegany		X							
Hunterdon		X							
Mercer			4						
Stark		5	3						
Marathon	X								
St. Croix	X								

C15. Do any of the following factors appear to impact the long-term performance of adjacent box-beams bridges?

Factor		States		Total Survey	
		No.	Percent	No.	Percent
Span Length	Yes	3	25	4	20
	No	9	75	16	80
Simple or Continuous Spans	Yes	3	27	4	24
	No	8	73	13	76
Skew	Yes	8	57	10	48
	No	6	43	11	52
Bearing Types	Yes	1	8	2	10
	No	11	92	19	90
Topped vs. Non-Topped	Yes	8	80	13	72
	No	2	20	5	28
Integral Abutments	Yes	3	27	4	24
	No	8	73	13	76
Phased Construction	Yes	4	31	4	21
	No	9	69	15	79
Waterproofing Membranes	Yes	5	45	9	47
	No	6	55	10	53
Exterior Beam Details	Yes	1	9	2	12
	No	10	91	15	88
Maintenance	Yes	4	36	10	48
	No	7	64	11	52

SECTION D—LONG-TERM PERFORMANCE, MAINTENANCE, REPAIRS, AND INSPECTION PRACTICES

D1. What problems have you observed with joints between adjacent box beams? (Check all that apply.)

a. None
b. Longitudinal cracking along the grout-box beam interface
c. Cracking within the grout
d. Spalling of the grout
e. Spalling of the corners of the boxes
f. Differential vertical movement between adjacent beams
g. Corrosion of the transverse ties
h. Corrosion of the longitudinal prestressing strands
i. Freeze-thaw damage to the grout
j. Freeze-thaw damage to the concrete adjacent to the joint
k. Water and salt leakage through the joint
l. Other

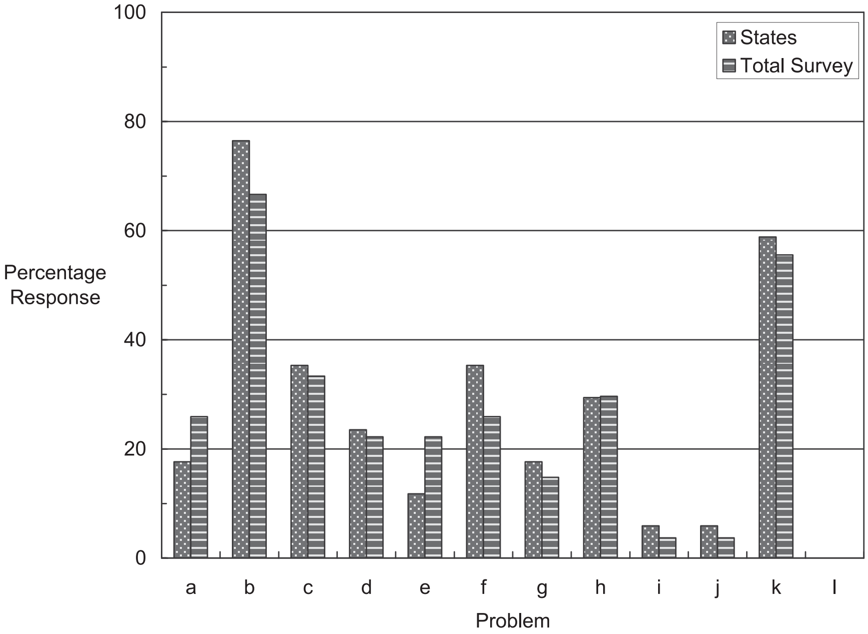

D2. If a concrete topping is used, is there reflective cracking through the topping along the edge of the beams?

Answer	States		Total Survey	
	No.	Percent	No.	Percent
Yes	13	65	17	55
No	6	30	11	35
Do not use Concrete Topping	1	5	3	10

D3. What methods of construction have you found to be most effective in preventing deterioration along the joints?

Respondent	Effective Methods to Prevent Joint Deterioration
States	
Arizona	Reinforced concrete topping slab
Delaware	Composite concrete deck
Idaho	Use only one method; so there is nothing to compare
Maryland	Increasing the transverse post-tensioning force
Massachusetts	5-in. thick topping
Michigan	Adequate post-tensioning force
New Jersey	Post-tensioning to pull beams together
New Mexico	Concrete topping, post-tensioned boxes, and grout keyways
New York	Full-depth shear keys and transverse tendons at quarter points
North Carolina	Provide sufficient post-tensioning
Ohio	Composite with reinforced topping
Oregon	When a concrete topping is used, we occasionally have reflective cracking but no water leakage.
Pennsylvania	Composite concrete deck
Tennessee	CIP overlay with slab overhang thickness equal to overlay thickness plus top flange thickness
Texas	None
Virginia	None
Canada	
British Columbia	Reinforced concrete shear key.
Ontario	Eliminate shear keys, provide a concrete slab, waterproofing membrane, and asphalt wearing surface
Counties	
Adams	Wet cure and avoid extremely hot and cold days
Allegany	Synthetic membrane or non-shrink grout
Hunterdon	Adequate deck reinforcement for shear transfer
Mercer	Reinforced concrete deck
Stark	None
Marathon	Hand pour the grout. Use concrete topping and not asphalt
St. Croix	Bonded transverse post-tensioning strands

D4. What methods of construction have you found to be least effective in preventing deterioration along the joints?

Respondent	Least-Effective Methods to Prevent Joint Deterioration
State	
Idaho	Use only one method; so there is nothing to compare
Massachusetts	Thin concrete toppings and thin epoxy overlays
Michigan	Part width construction
New Jersey	Use of shear keys along the longitudinal joints
New Mexico	Ignoring items listed in D3
New York	Phased construction because of camber growth and connection issues
Ohio	Non-composite with waterproofing and asphalt wearing surface

Oregon	Asphalt wearing surface with waterproofing membrane
Pennsylvania	Asphalt membrane without waterproofing membrane
Tennessee	No concrete overlay and no continuity
Texas	None
Virginia	None
Canada	
British Columbia	Non-reinforced shear key
Counties	
Allegany	Filling the keyways with concrete
Hunterdon	Inadequate deck reinforcement
Mercer	Asphaltic riding surface on waterproof membrane
Marathon	Asphalt topping

D5. What methods, if any, do you use to maintain adjacent box beam bridges?

Respondent	Methods to Maintain Adjacent Box Beam Bridges
State	
Delaware	None
Idaho	No different than any other bridge
Massachusetts	Regular inspections
Michigan	Nothing special
Missouri	None
New Jersey	Proactive maintenance methods have not been necessary since using post-tensioning.
New Mexico	Same as I-beam bridges
New York	Sealing the cast-in-place deck
Ohio	Repair or replace asphalt wearing surface, waterproofing, and concrete topping.
Oregon	Bridges require very little maintenance.
Tennessee	Remove the asphalt topping, blast surface, and place CIP concrete topping with integral abutments
Texas	None
Virginia	Periodic crack sealing if noted in inspection reports
Canada	
British Columbia	Annual washing of decks to remove chlorides
Counties	
Huntingdon	Nothing special
Stark	Keep wearing surface free of materials that trap water. Crack seal if it gets bad.
Marathon	Seal deck and cracks
St. Croix	Regularly seal the deck

D6. What methods, if any, have you used to rehabilitate or retrofit adjacent box beam bridges and were they effective?

Respondent	Methods to Rehabilitate or Retrofit Adjacent Box Beam Bridges
State	
Delaware	Added concrete decks to older bridges.

Idaho	No adjacent box beam bridges have been rehabilitated yet.
Maryland	Most built in the last 20 years and have not needed rehabilitation.
Massachusetts	5-in. thick topping on cleaned and exposed beam tops
Michigan	Concrete overlays
Missouri	None
New Jersey	Not been required
New York	Deck replacement, waterproofing membrane over the joints, resurfacing the deck, and resealing the deck
Ohio	No established methods
Oregon	Supplemental tie rods on the underside
Pennsylvania	Replaced asphalt wearing surface without membrane with reinforced concrete composite deck using reinforcement dowelled into the webs.
Tennessee	Remove the asphalt topping, blast surface, and place CIP concrete topping with integral abutments
Texas	None
Canada	
British Columbia	Adding a reinforced concrete overlay.
Ontario	Provide topping slab and waterproof.
Counties	
Adams	Add stirrups and reinforcement to non-composite beam and apply a 5-in thick concrete overlay
Hunterdon	Have not had to address this problem. Bridges are 25 years old or younger.
Mercer	Replace asphaltic riding surface with reinforced concrete deck.
Stark	Replace beams.
Marathon	None

D7. What methods of inspection are used for these bridges?

Answer	States		Total Survey	
	No.	Percent	No.	Percent
Visual	19	100	30	100
Non-Destructive Testing	0	0	3	10

Other methods listed for inspection were chain dragging, full deck condition survey, and coring.

D8. Are venting holes inspected for debris?

Answer	States		Total Survey	
	No.	Percent	No.	Percent
Yes	10	56	13	45
No	2	11	5	17
Not Applicable	6	33	11	38

SECTION E—RESEARCH

E1. Please list any research recently completed or in progress by your organization related to the design, construction, repair, and/or maintenance of adjacent box beam bridges.

Maryland: Study of the Impact of the Transverse Post-tensioning Force Required to Make Precast, Prestressed Concrete Slabs as a Single Unit

Michigan: 1. RC-1509 Use of Unbonded CFCC for Transverse Post-Tensioning of Side-By-Side Box-Beam Bridges, Feb. 2008, by Nabil Grace and Elin Jensen, LTU

2. RC-1489 - Experimental Evaluation and Field Monitoring of Prestressed Box Beams for SCC Demonstration Bridge, July 2007, by Rigoberto Burgueno and David A. Bendert, MSU

3. R-1391 - Investigation of Prestressed Box Beam Plaza Structures, Feb. 2001, by Douglas Needham and Roger Till, MDOT

4. R-1348 - Investigation of Condition of Prestressed Concrete Bridges in Michigan, Jan. 1997, by Douglas Needham and David Juntunen, MDOT

New York 1. Full Depth Shear Key Performance in Adjacent Prestressed Beam Bridges by Lall, DiCocco, Alampali, 1997 (Follow-up study to be conducted Summer 2008)

2. In-Service Performance of HP Concrete Bridge Decks / Owens, Alampali, 1999 available at https://www.nysdot.gov/portal/page/portal/divisions/engineering/technical-services/trans-r-and-d-repository/sr130.pdf

Ohio: 1. Evaluation of improved shear key designs for multi-beam box girder bridges (1997)

2. An investigation of load transfer in multi-beam prestressed box girder bridges (1993)

3. Transverse post-tensioning of adjacent box beams including instrumentation and monitoring (on-going)

4. Destructive load testing of a box beam (1995)

5. Testing of full-scale prestressed beams to evaluate shear key performance (1998)

Pennsylvania: 1. Harries K.A., "Full-scale Testing Program on De-commissioned Girders from the Lake View Drive Bridge," Pennsylvania Department of Transportation, Harrisburg, PA, Report No. FHWA-PA-2006-008-EMG001, August 2006, 158 pp.

2. Naito, C., R. Sause, I. Hodgson, S. Pessiki, and C. Desai, “Forensic Evaluation of Prestressed Box Beams from the Lake View Drive Bridge over I-70,” Final Report, Lehigh University, ATLSS Report No. 06-13, September 2006.

E2. Please list any design, construction, repair, and/or maintenance issues that require further research and evaluation.

Delaware: Longitudinal cracks in the soffit, strands exposed, etc.

Maryland: Need to determine if the higher transverse post-tensioning force that we are now using has eliminated the problem we were having with reflective cracking.

Missouri: Prevention of leaks through longitudinal joints and maintenance requirements for long-term performance.

New York: 1. Should we be designing the connections between adjacent beams?

2. Should we be using grouted transverse tendons instead of using ungrouted polystrand? Is one better than the other?

3. What are the primary causes of reflective longitudinal cracking in concrete bridge decks over the joints in adjacent beams and how can they be prevented/minimized?

Ohio: 1. Develop practical methods for restoration of load sharing between in-place adjacent beams.

2. Establish amount of post-tensioning force necessary for beams to act as a single unit and develop necessary procedures and details based on best construction practices.

3. Develop a shear key configuration and a grout that work with the post-tensioning.

4. Waterproofing that can accommodate differential deflection of adjacent in-place beams.

5. Develop details for removing existing and installing new interior box beams including connection details for the new to existing tie rods.

6. Repair details/materials for deteriorated box beams

Oregon: 1. Corrosion protection for tie rods.

2. Installation of tie rods under staged construction.

3. Use of stainless steel stirrups with black strand (is a separation between these dissimilar metals necessary?).

Pennsylvania: From a construction perspective, the optimum shear key detail, material used to fill the shear key, and methods to prevent reflective cracking into the deck are important issues. PENNDOT is very interested in the best practices.

Prince Edward Island: Long term maintenance and serviceability

Adams: Addition of stirrups and 5-in. thick overlay to non composite beams - is this too much additional dead load and by how much does it reduce the live load capacity?

Mercer: Most of the problems that we have experienced are caused by road salts migrating through the riding surface and causing deterioration to the precast beams and to the grouted keyways. This occurs even though a waterproofing membrane has been applied.

Stark: Leakage through longitudinal joints. Would like to see better longitudinal joints.

APPENDIX C
BEAM AND CONNECTION DETAILS

BOX BEAM SECTIONS

FIGURE C1 AASHTO/PCI box beam cross sections.
(Small dots indicate possible locations of prestressing strands.)

BARRIER CONNECTION DETAILS

The following drawings were selected from the survey response to illustrate the range of connection details that are utilized. For illustration purposes, the drawings have been simplified.

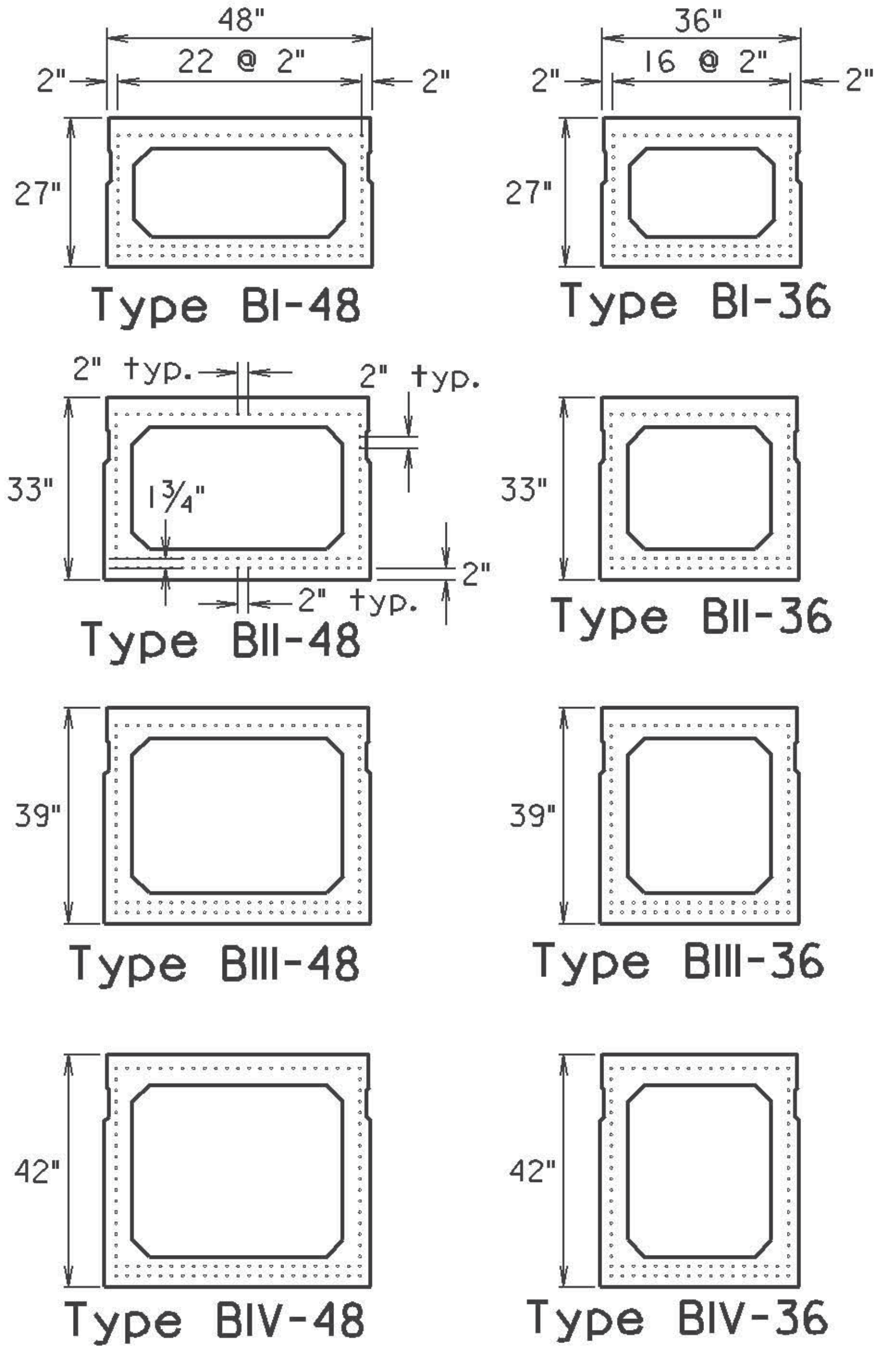

FIGURE C1 AASHTO/PCI box beam cross sections.
(Small dots indicate possible locations of prestressing strands.)

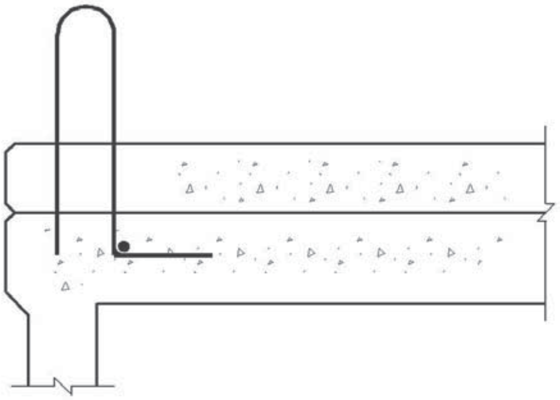

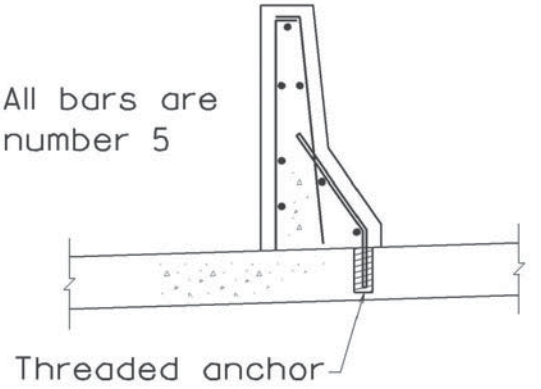
All bars are number 5
Threaded anchor

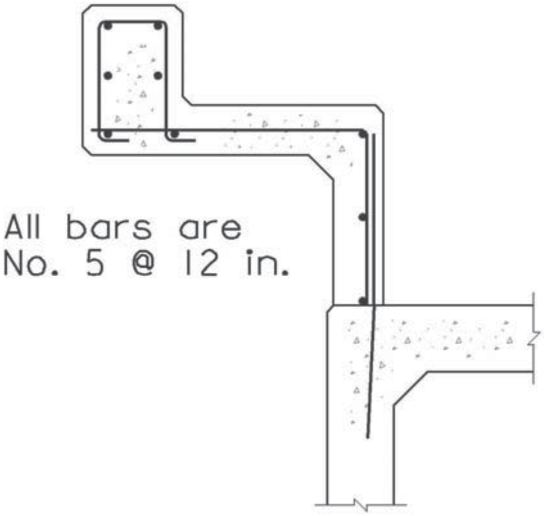
All bars are
No. 5 @ 12 in.

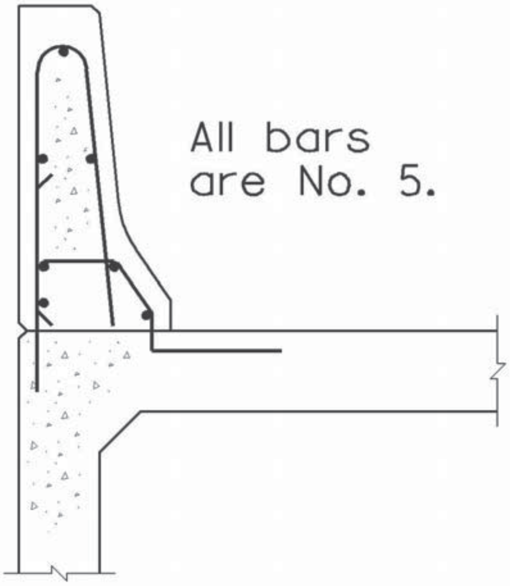
All bars
are No. 5.

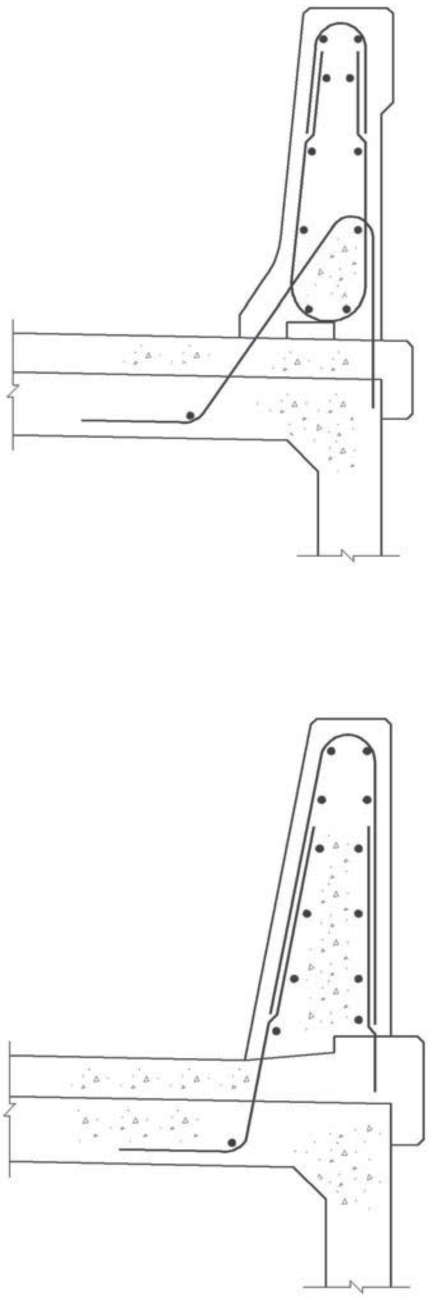

a. Concrete barrier

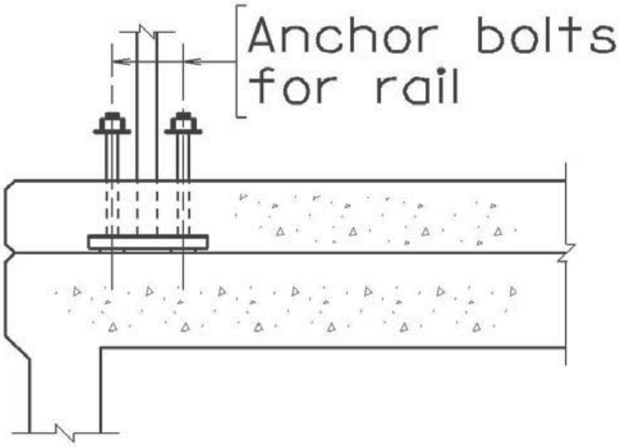
Anchor bolts
for rail

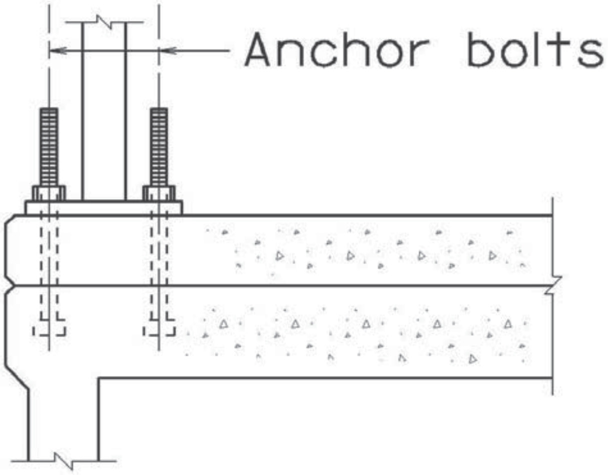
Anchor bolts

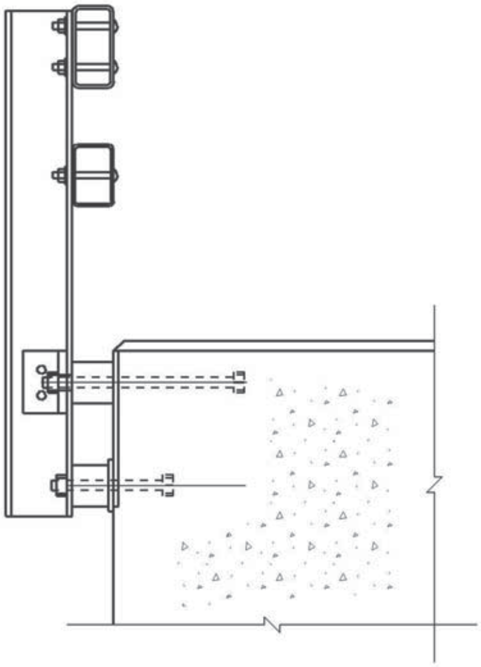

b. Steel barrier

FIGURE C2 Selected details for barrier connections.

APPENDIX D

RESEARCH PROBLEM STATEMENT

I. PROBLEM NUMBER

II. PROBLEM TITLE

Design Guidelines for Connection Details of Adjacent Precast Concrete Box Beam Bridges.

III. RESEARCH PROBLEM STATEMENT

Bridges constructed with adjacent precast, prestressed concrete box beams have been in service for many years and provide an economical solution for short and medium span bridges. A recurring problem is cracking in the longitudinal grouted joints between adjacent beams, resulting in reflective cracks forming in the asphalt wearing surface or concrete deck. The cracking appears to be initiated by stresses caused by temperature gradients, live loads, transverse post-tensioning, or a combination. Once the cracking has occurred, chloride-laden water can penetrate the cracks, saturate the sides of the beams, and cause corrosion of the reinforcement and prestressing strand.

NCHRP Synthesis 393 reported a wide variety of practices used by state highway agencies for the connection details between adjacent box beams. These practices include partial depth or full depth grouted keyways, keyways grouted before or after transverse post-tensioning, prepackaged or non-prepackaged grout materials, post-tensioned or non-tensioned transverse ties, a wide range of transverse post-tensioning forces, and cast-in-place concrete deck or no deck. A few states reported that their methods had reduced the longitudinal cracking, whereas others had not been successful using similar methods.

IV. LITERATURE SEARCH SUMMARY

A description of current practices and recent research is provided in NCHRP Synthesis of Highway Practice 393: Adjacent Precast Concrete Box Beam Bridges: Connection Details.

V. RESEARCH OBJECTIVE

The objective of the proposed research is to develop design guidelines for connection details in adjacent precast concrete box beam bridges to minimize or eliminate cracking in the longitudinal joints between adjacent boxes. Proposed revisions to the AASHTO LRFD Bridge Design Specifications and the LRFD Bridge Construction Specifications will be developed. Specifically, the research should address design methodology, effect of span length, bridge width, and skew angle; number and location (both vertically and horizontally) of transverse post-tensioning ties; optimum keyway shape and configuration; keyway preparation; keyway grout type and curing methods; and grouting and post-tensioning sequence for two-stage construction.

VI. ESTIMATE OF PROBLEM FUNDING AND RESEARCH PERIOD

Recommended Funding: $500,000

Research Period: 3 years

VII. URGENCY, PAYOFF POTENTIAL, AND IMPLEMENTATION

Adjacent box beam bridges provide an economical solution for short and medium span bridges as well as a competitive solution for spans up to about 100 ft. According to the National Bridge Inventory, adjacent box beam bridges constitute about one sixth of bridges built annually on public roads. Unfortunately, some of the bridges have had to be replaced because of corrosion caused by leakage at the joints. Otherwise, this bridge-type has had an excellent track record. If cracking and leakage at the joints can be prevented, these bridges could easily have a service life of 100 years.

Results of this research will be implemented through the development of design guidelines that can be adopted by highway agencies and through revisions to the AASHTO LRFD Bridge Design and Construction Specifications.

Grand Challenge

The proposed research addresses the AASHTO Highway Subcommittee on Bridges and Structures (HSCOBS) grand challenges of Extending Service Life and Optimizing Structural Systems.

Thrust/Business Need

The proposed research addresses the HSCOBS thrust areas of Enhanced Specifications for Improved Structural Performance and Enhanced Materials, Structural Systems, and Technologies.

The associated building blocks are design and construction concepts for rapid replacement and repair, performance based specifications, materials, and structural systems.

VIII. PERSON(S) DEVELOPING THE PROBLEM

Henry G. Russell
Henry G. Russell, Inc.
720 Coronet Road
Glenview, IL 60025

Phone: 847-998-9137 Fax: 847-998-0292 email: henry@hgrconcrete.com

IX. PROBLEM MONITOR

X. DATE AND SUBMITTED BY

Abbreviations used without definition in TRB Publications:

AAAE	American Association of Airport Executives
AASHO	American Association of State Highway Officials
AASHTO	American Association of State Highway and Transportation Officials
ACI–NA	Airports Council International–North America
ACRP	Airport Cooperative Research Program
ADA	Americans with Disabilities Act
APTA	American Public Transportation Association
ASCE	American Society of Civil Engineers
ASME	American Society of Mechanical Engineers
ASTM	American Society for Testing and Materials
ATA	Air Transport Association
ATA	American Trucking Associations
CTAA	Community Transportation Association of America
CTBSSP	Commercial Truck and Bus Safety Synthesis Program
DHS	Department of Homeland Security
DOE	Department of Energy
EPA	Environmental Protection Agency
FAA	Federal Aviation Administration
FHWA	Federal Highway Administration
FMCSA	Federal Motor Carrier Safety Administration
FRA	Federal Railroad Administration
FTA	Federal Transit Administration
IEEE	Institute of Electrical and Electronics Engineers
ISTEA	Intermodal Surface Transportation Efficiency Act of 1991
ITE	Institute of Transportation Engineers
NASA	National Aeronautics and Space Administration
NASAO	National Association of State Aviation Officials
NCFRP	National Cooperative Freight Research Program
NCHRP	National Cooperative Highway Research Program
NHTSA	National Highway Traffic Safety Administration
NTSB	National Transportation Safety Board
SAE	Society of Automotive Engineers
SAFETY-LU	Safe, Accountable, Flexible, Efficient Transportation Equity Act: A Legacy for Users (2005)
TCRP	Transit Cooperative Research Program
TEA-21	Transportation Equity Act for the 21st Century (1998)
TRB	Transportation Research Board
TSA	Transportation Security Administration
U.S.DOT	United States Department of Transportation