SPECIAL REPORT 265

The National Highway Traffic Safety Administration's

Rating System for Rollover Resistance

An Assessment

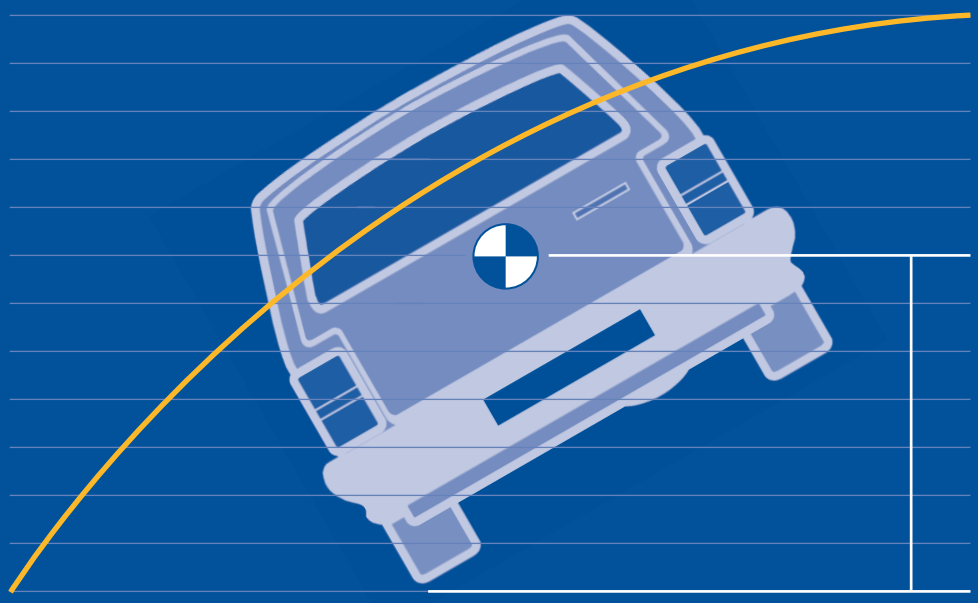

TRANSPORTATION RESEARCH BOARD
THE NATIONAL ACADEMIES

SPECIAL REPORT 265 NHTSA's *Rating System for Rollover Resistance* An Assessment TRB

Transportation Research Board Special Report 265

Subscriber Category
IVB safety and human performance

Transportation Research Board publications are available by ordering individual publications directly from the TRB Business Office, through the Internet at national academies.org/trb, or by annual subscription through organizational or individual affiliation with TRB. Affiliates and library subscribers are eligible for substantial discounts. For further information, contact the Transportation Research Board Business Office, National Research Council, 2101 Constitution Avenue, NW, Washington, DC 20418 (telephone 202-334-3214; fax 202-334-2519; or e-mail TRBsales@nas.edu).

NOTICE: The project that is the subject of this report was approved by the Governing Board of the National Research Council, whose members are drawn from the councils of the National Academy of Sciences, the National Academy of Engineering, and the Institute of Medicine. The members of the committee responsible for the report were chosen for their special competencies and with regard for appropriate balance.

This report has been reviewed by a group other than the authors according to the procedures approved by a Report Review Committee consisting of members of the National Academy of Sciences, the National Academy of Engineering, and the Institute of Medicine.

This report was sponsored by the National Highway Traffic Safety Administration.

Library of Congress Cataloging-in-Publication Data
National Research Council (U.S.). Committee for the Study of a Motor Vehicle Rollover Rating System.
The National Highway Traffic Safety Administration's rating system for rollover resistance : an assessment / Committee for the Study of a Motor Vehicle Rollover Rating System.
p. cm. — (Special report ; 265)
"Transportation Research Board, National Research Council."
Includes bibliographical references.
ISBN 0-309-07249-2
1. Motor vehicles—United States—Evaluation. 2. Motor vehicles—Stability. 3. United States. National Highway Traffic Safety Administration—Research. 4. Motor vehicles—Rollover protective structures. I. Title. II. Special report (National Research Council (U.S.). Transportation Research Board) ; 265.

TL245.8 .N38 2002
629.2′31—dc21

2002067171

THE NATIONAL ACADEMIES

Advisers to the Nation on Science, Engineering, and Medicine

National Academy of Sciences
National Academy of Engineering
Institute of Medicine
National Research Council

The **National Academy of Sciences** is a private, nonprofit, self-perpetuating society of distinguished scholars engaged in scientific and engineering research, dedicated to the furtherance of science and technology and to their use for the general welfare. On the authority of the charter granted to it by the Congress in 1863, the Academy has a mandate that requires it to advise the federal government on scientific and technical matters. Dr. Bruce M. Alberts is president of the National Academy of Sciences.

The **National Academy of Engineering** was established in 1964, under the charter of the National Academy of Sciences, as a parallel organization of outstanding engineers. It is autonomous in its administration and in the selection of its members, sharing with the National Academy of Sciences the responsibility for advising the federal government. The National Academy of Engineering also sponsors engineering programs aimed at meeting national needs, encourages education and research, and recognizes the superior achievements of engineers. Dr. William A. Wulf is president of the National Academy of Engineering.

The **Institute of Medicine** was established in 1970 by the National Academy of Sciences to secure the services of eminent members of appropriate professions in the examination of policy matters pertaining to the health of the public. The Institute acts under the responsibility given to the National Academy of Sciences by its congressional charter to be an adviser to the federal government and, on its own initiative, to identify issues of medical care, research, and education. Dr. Kenneth I. Shine is president of the Institute of Medicine.

The **National Research Council** was organized by the National Academy of Sciences in 1916 to associate the broad community of science and technology with the Academy's purposes of furthering knowledge and advising the federal government. Functioning in accordance with general policies determined by the Academy, the Council has become the principal operating agency of both the National Academy of Sciences and the National Academy of Engineering in providing services to the government, the public, and the scientific and engineering communities. The Council is administered jointly by both the Academies and the Institute of Medicine. Dr. Bruce M. Alberts and Dr. William A. Wulf are chairman and vice chairman, respectively, of the National Research Council.

The **Transportation Research Board** is a division of the National Research Council, which serves the National Academy of Sciences and the National Academy of Engineering. The Board's mission is to promote innovation and progress in transportation by stimulating and conducting research, facilitating the dissemination of information, and encouraging the implementation of research results. The Board's varied activities annually engage more than 4,000 engineers, scientists, and other transportation researchers and practitioners from the public and private sectors and academia, all of whom contribute their expertise in the public interest. The program is supported by state transportation departments, federal agencies including the component administrations of the U.S. Department of Transportation, and other organizations and individuals interested in the development of transportation.

Committee for the Study of a Motor Vehicle Rollover Rating System

Committee

David N. Wormley, The Pennsylvania State University, *Chair*
Karin M. Bauer, Midwest Research Institute, Kansas City, Missouri
James E. Bernard, Iowa State University, Ames
Ann Bostrom, Georgia Institute of Technology, Atlanta
Susan A. Ferguson, Insurance Institute for Highway Safety, Arlington, Virginia
B. John Garrick, NAE, Independent Consultant, Laguna Beach, California
Paul A. Green, University of Michigan Transportation Research Institute, Ann Arbor
David L. Harkey, University of North Carolina Highway Safety Research Center, Chapel Hill
J. Karl Hedrick, University of California at Berkeley
David C. Holloway, University of Maryland, College Park
L. Daniel Metz, Metz Engineering and Racing, Champaign, Illinois
N. Eugene Savin, University of Iowa, Iowa City
Kimberly M. Thompson, Harvard School of Public Health, Boston, Massachusetts

Transportation Research Board Staff

Jill Wilson, Study Director

Preface

This study was conducted in response to a congressional mandate, contained in the Department of Transportation and Related Agencies Appropriations Act, 2001 (Public Law 106–346), which required the U.S. Department of Transportation to fund a study by the National Academy of Sciences

> on whether the static stability factor is a scientifically valid measurement that presents practical, useful information to the public, including a comparison of the static stability factor test versus a test with rollover metrics based on dynamic driving conditions that may induce rollover events.[1]

In response to a request from the National Highway Traffic Safety Administration (NHTSA), the Transportation Research Board (TRB) of the National Research Council (NRC) formed a committee of 13 members under the leadership of David Wormley, Dean of the College of Engineering at the Pennsylvania State University. Panel members have expertise in the following areas: mechanical engineering and vehicle dynamics; vehicle safety and testing; vehicle control systems; roadway and roadside design; statistics, econometrics, and data analysis; risk assessment and communication; public policy; consumer information; and human factors and driver behavior.

The committee met four times between April and October 2001. The first two meetings were devoted primarily to information gathering; details of invited presentations and participation in the open discussions are given in Appendix B. Additional information-gathering activities undertaken by committee members included visits to the Consumers Union Vehicle Test Facility in East Haddam, Connecticut, and site visits to Ford, General Motors, and DaimlerChrysler facilities in the Detroit area (see Appendix B). The third and fourth committee meetings were devoted to deliberative discussions and preparation of the committee's final report. An interim report, issued in July 2001, presented the committee's preliminary findings and identified outstanding issues to be addressed during the remainder of the study. To expedite the study process, the committee divided into three groups, each of which assumed primary responsibility for information gathering and

[1] The full text of the congressional mandate is provided in Appendix A.

analyses in one of the major subject areas of the study—vehicle dynamics, statistics and data analysis, and consumer information. Contributions from each of the working groups were used by the committee as a whole to develop this consensus report.

This report has been reviewed in draft form by individuals chosen for their diverse perspectives and technical expertise, in accordance with procedures approved by the NRC's Report Review Committee. The purpose of this independent review is to provide candid and critical comments that will assist the authors and the NRC in making the published report as sound as possible and to ensure that the report meets institutional standards for objectivity, evidence, and responsiveness to the study charge. The content of the review comments and draft manuscript remain confidential to protect the integrity of the deliberative process. We wish to thank the following individuals for their participation in the review of this report: James W. Dally, University of Maryland, College Park; Thomas D. Gillespie, University of Michigan Transportation Research Institute, Ann Arbor; Robert L. Mason, Southwest Research Institute, San Antonio, Texas; M. Granger Morgan, Carnegie Mellon University, Pittsburgh, Pennsylvania; Paul A. Ruud, University of California, Berkeley; John M. Starkey, Purdue University, West Lafayette, Indiana; and Michael S. Wogalter, North Carolina State University, Raleigh.

Although the reviewers listed above have provided many constructive comments and suggestions, they were not asked to endorse the committee's conclusions or recommendations, nor did they see the final draft of the report before its release. The review of this report was overseen by Morris Tanenbaum, AT&T Corporation (retired), Short Hills, New Jersey, appointed by the Report Review Committee, and Lester A. Hoel, University of Virginia, Charlottesville; they were responsible for making certain that an independent examination of the report was carried out in accordance with institutional procedures and that all review comments were carefully considered. Responsibility for the final content of this report rests entirely with the authoring committee and the institution.

The committee wishes to thank the many individuals who contributed to this study through presentations at meetings, correspondence, and telephone calls. The assistance of Pat Boyd of NHTSA and Scott Schmidt of the Alliance of Automobile Manufacturers in arranging briefings and responding to committee requests for information is gratefully acknowledged. The committee also wishes to thank the representatives of Consumers Union, Ford Motor Company, General Motors, and DaimlerChrysler for hosting the visits to their facilities. Special appreciation is expressed to Sue Partyka at NHTSA for her timely responses to the committee's requests for further statistical analyses of crash data, and to Simon Lee of the Department of Economics, University of Iowa, for statistical analyses in support of the study.

Jill Wilson managed the study under the supervision of Stephen R. Godwin, Director of Studies and Information Services. Suzanne Schneider, Associate Executive Director of TRB, managed the report review process. The report was edited by Rona Briere and prepared for publication under the supervision of Nancy A. Ackerman, Director of Reports and Editorial Services. Frances E. Holland assisted in logistics and communications with the committee, and Alisa Decatur provided assistance with word processing and production of the final manuscript.

Contents

Executive Summary **1**

1 Introduction **9**
National Highway Traffic Safety Administration's Initiatives on Rollover 10
NHTSA's Star Ratings for Rollover Resistance 13
Consumer Information on Motor Vehicle Safety 15
Study Approach and Organization of Report 17

2 Vehicle Dynamics **21**
Background 22
Static Measures of Rollover Propensity 24
Need for Dynamic Testing 31
Dynamic Testing: Features and Challenges 34
Findings and Recommendation 36

3 Statistics and Data Analysis **38**
Rollover Crash Data 39
Background and Notation 43
Statistical Models 47
Scenario Effects 54
Nonparametric Model 59
Rollover Curve and Star Rating System 59
Findings and Recommendations 62

4 Consumer Information **64**
Practicality and Utility of NHTSA's Rollover Resistance Ratings 64
Availability and Use of NHTSA's Rollover Resistance Ratings 74
Future Approaches 76
Findings and Recommendations 80

5 Summary, Major Findings, and Recommendations for a Future Approach 84
Context 84
Static Stability Factor 85
NHTSA's Star Ratings for Rollover Resistance 89
Recommendations for a Future Approach 93

Appendixes

A Congressional Request for Study 96

B Committee Meetings and Other Activities 97

C Supplementary Statistical Results 100

D Rollover Information from NHTSA's Website 104

Study Committee Biographical Information 131

Executive Summary

Motor vehicle rollovers involving passenger cars, vans, pickup trucks, and sport utility vehicles (SUVs) result in approximately 10,000 deaths and 27,000 serious injuries each year in the United States. Although rollover occurs in fewer than 1 in 10 tow-away crashes involving light vehicles,[1] these crashes account for almost one-third of light-vehicle occupant fatalities.

The National Highway Traffic Safety Administration (NHTSA) has developed a five-star rating system to inform consumers about the rollover resistance of passenger cars and light multipurpose passenger vehicles and trucks. This system has been incorporated into the New Car Assessment Program. The ratings derive from a correlation between measured values of static stability factor (SSF)[2] for a range of vehicles and corresponding rollover rates determined from single-vehicle crash data. Among the 2001 model vehicles currently rated by NHTSA for rollover resistance, most SUVs received two- or three-star ratings, while most passenger cars received four- or five-star ratings (five stars indicates the best vehicle performance and one star the worst).

Congress requested this study of NHTSA's rollover resistance rating system. Public Law 106-346 required the U.S. Department of Transportation to fund a study "on whether the static stability factor is a scientifically valid measurement that presents practical, useful information to the public, including a comparison of the static stability factor test versus a test with rollover metrics based on dynamic driving conditions that may induce rollover events." Particular emphasis was to be placed on the potential role of consumer information on vehicle characteristics, in particular SSF, in achieving a reduction in the rollover crash rate and in related deaths and injuries. In response to a request from NHTSA, the Transportation Research Board of the National Research Council established a 13-member committee to conduct the study.[3,4]

[1] Light vehicles are defined by the National Highway Traffic Safety Administration (NHTSA) as the combination of (1) passenger cars and (2) multipurpose passenger vehicles under 10,000 pounds gross vehicle weight rating.

[2] SSF is defined as the vehicle's track width, T, divided by twice its center of gravity height, H; i.e., SSF = $T/2H$.

[3] The committee met four times between April and October 2001, gathering information from a range of interested parties. Members of the committee also visited the Consumers Union Vehicle Test Facility in Connecticut, as well as Ford, General Motors, and DaimlerChrysler facilities in the Detroit area. In addition, the committee reviewed information on motor vehicle rollover from the technical literature, the Internet, NHTSA dockets, and the popular press.

[4] Although not specifically asked to do so by Congress, the committee has included in this report comments on the relevance of electronic stability control systems to rollover in response to a request from NHTSA.

BACKGROUND

Automobile crashes are complex events involving three main contributing factors and their interactions: the driver, the driving environment (e.g., weather and road conditions, time of day), and the vehicle. The crash data files used by NHTSA to develop its rollover resistance rating system[5] include information characterizing the driver and road conditions associated with the crash. This information defines different crash scenarios that can be associated with markedly different risks of rollover. For example, scenarios involving young drivers (under age 25) or those who have been drinking carry a relatively high risk of rollover, as do scenarios involving inclement weather or curves in the road. The important question addressed by this report is the extent to which the vehicle—and in particular its SSF value—affects the risk of rollover for different drivers and driving environments.

As noted, in accordance with the requirements of Public Law 106-346, this study focuses on the potential for reducing the rollover crash rate, as well as resulting deaths and injuries, by providing consumer information related to vehicle characteristics, specifically SSF. It is important to remember that other approaches may be as or more effective. For example, a change in driver behavior leading to increased seat belt use also could result in a reduction in rollover-related deaths and injuries; NHTSA estimates that belted occupants are about 75 percent less likely than unbelted occupants to be killed in a rollover crash. Furthermore, it is essential to ensure that changes in vehicle design leading to a reduction in one contributor to overall vehicle risk—such as rollover—do not compromise other aspects of vehicle safety. Many complex risk trade-offs need to be considered in pursuing the ultimate goal of improved road safety.

FINDINGS

The committee's findings regarding SSF and NHTSA's star ratings for rollover resistance are presented below.

Static Stability Factor

NHTSA, vehicle manufacturers, and others have used various static measures and driving maneuvers to characterize the rollover behavior of vehicles. In developing its consumer information on rollover, NHTSA selected SSF as an indicator of rollover propensity in single-vehicle crashes. This decision resulted in part from the ability to measure SSF directly for vehicles, and in part from

[5] The rating system is based on analyses of single-vehicle crashes only.

the statistical correlation between observed crash outcomes (rollover or no rollover) and SSF.

In developing its rating system, NHTSA undertook statistical studies to investigate the relationship between measured values of SSF for a range of vehicles and corresponding rollover rates determined from crash data. The agency reviewed crash frequencies and rollover rates, and used data from six states, selected as representative of national trends, for regression analyses using an exponential statistical model.[6] At the request of the committee, NHTSA conducted additional analyses of these crash data using a logit statistical model. The agency computed separate rollover curves and associated confidence bands for different crash scenarios.[7] These curves indicate that an increase in SSF reduces the probability of rollover in the event of a single-vehicle crash, although this trend is less pronounced for lower-risk scenarios.

Finding 1

Through a rigid-body model, SSF relates a vehicle's track width, T, and center of gravity height, H, to a clearly defined level of the sustained lateral acceleration that will result in the vehicle's rolling over. The rigid-body model is based on the laws of physics and captures important vehicle characteristics related to rollover.

Finding 2

Analysis of crash data reveals that, for higher-risk scenarios, SSF correlates significantly with a vehicle's involvement in single-vehicle rollovers, although driver behavior and driving environment also contribute. For these scenarios, the statistical trends in crash data and the underlying physics of rollover provide consistent insight: an increase in SSF reduces the likelihood of rollover.

Finding 3

Metrics derived from dynamic testing are needed to complement static measures, such as SSF, by providing information about vehicle handling characteristics that are important in determining whether a driver can avoid conditions leading to rollover.

[6] NHTSA refers to this as a linear model.

[7] In the present context, a crash scenario is defined by a unique combination of driver and environmental variables likely to affect the outcome of the crash. Such scenarios can be ordered by their observed frequency of rollovers. When the frequency is low, the scenarios are said to be low risk, and when the frequency is high, the scenarios are high risk. An example of a high-risk scenario would be one involving a male driver who had been drinking and was negotiating a curve on a road with a speed limit of 50 mph or greater.

NHTSA's Star Ratings for Rollover Resistance

NHTSA derived its star ratings for rollover resistance using an exponential statistical model and regression analysis correlating SSF with crash data. The agency based the ratings on an average rollover curve calculated using a dataset comprising single-vehicle crash data from six states. This average rollover curve gives the rollover risk—defined as the probability of rollover in the event of a single-vehicle crash—for each value of SSF, assuming an average scenario. Data on driver and environmental variables were used in estimating the curve. When developing its ratings, NHTSA did not consider the uncertainty in the average rollover propensity curve as reflected in the associated confidence bands.

NHTSA partitioned the average rollover curve into five regions, based on the rollover probability in the event of a single-vehicle crash. If a vehicle's SSF corresponds to a rollover probability range of 0–10 percent, as defined by the average rollover curve, the vehicle is assigned five stars. If its SSF corresponds to a rollover probability range of 10–20 percent, it is assigned four stars, and so on. If the vehicle's SSF indicates that—according to the average rollover curve—it has a rollover probability of greater than 40 percent in the event of a single-vehicle crash, it is assigned a one-star rollover resistance rating. Rollover curves generated from crash data represent an average over many different vehicle makes and models. Therefore, a data point representing the probability of rollover in a single-vehicle crash for a given vehicle make or model may fall above or below the curve.

NHTSA used two series of consumer focus group studies to develop and evaluate its star rating system. The first series addressed rollover and the effects of information about rollover on consumers. In the second series, consumer awareness and understanding of rollover problems were explored, and consumer comprehension of two potential texts aimed at explaining the agency's rollover resistance ratings was evaluated. The rollover information on NHTSA's website has attracted interest, as indicated by site use statistics. However, no empirical data on consumers' use of the ratings were available to the committee.

Finding 4

NHTSA's implementation of an exponential statistical model lacks the confidence levels needed to permit discrimination among vehicles within a vehicle class[8] with regard to differences in rollover risk.

[8] Vehicles are often grouped into classes, notably passenger cars, SUVs, light trucks, and vans.

Finding 5

The relationship between rollover risk and SSF can be estimated accurately with available crash data and software using a logit model. For the analysis of rollover crash data, this model is more appropriate than an exponential model.

Finding 6

The approximation of the rollover curve with five discrete levels—corresponding to the five rating categories—is coarse and does not adequately convey the information provided by the available crash data, particularly at lower SSF values, where the rollover curve is relatively steep.

Finding 7

There is a gap between recommended practices for the development of safety information and NHTSA's current process for identifying and meeting consumer needs for such information. In particular,

- The focus group studies used to develop the star rating system were limited in scope.
- The agency has not undertaken empirical studies to evaluate consumers' use of the rollover resistance rating system in making vehicle safety judgments or purchase decisions.

SUMMARY FINDINGS

The committee has synthesized its findings in the areas of vehicle dynamics, statistics and data analysis, and consumer information into two summary findings that respond to the congressional mandate for this study.

Summary Finding 1

SSF captures important vehicle characteristics related to rollover propensity and is strongly correlated with the outcome of actual crashes (rollover versus no rollover), as demonstrated by statistical analyses of crash data. Data from dynamic testing could provide important information on vehicle crash-avoidance metrics that would complement static measures.

Summary Finding 2

NHTSA's star ratings for rollover resistance are likely to be of limited use in presenting practical information to the public because

- There were shortcomings in the statistical methodology used to derive the average rollover curve.
- The approximation of the rollover curve by five discrete rating categories is coarse and does not adequately convey the degree of resolution among vehicles provided by available crash data.
- The limited procedures used by NHTSA to develop and evaluate the star rating system do not demonstrate with reasonable confidence the likely effectiveness of the system.

RECOMMENDATIONS FOR A FUTURE APPROACH

The committee concludes that consumer information on motor vehicle rollover can assist the public in choosing safer cars and encourage manufacturers to investigate ways of making vehicles less susceptible to rollover. To be comprehensive, such information needs to capture

- The results of dynamic tests that assess a vehicle's control and handling characteristics, and
- Information from static measures indicative of a vehicle's rollover propensity.

In accordance with the requirements of the Transportation Recall Enhancement, Accountability, and Documentation (TREAD) Act (Public Law 106-414), NHTSA is investigating several driving maneuver tests for rollover resistance. Challenges remain in developing the requisite dynamic tests, together with related consumer information that is technically accurate, as well as practical and useful to the public. Nevertheless, the committee has not identified any insurmountable engineering barriers to the development of a representative dynamic test (or tests) that would differentiate meaningfully among vehicles. Similarly, the development of consumer information based on static measures and dynamic tests appears feasible, particularly if NHTSA takes advantage of recommended development practices and proven techniques for communicating risk-based information to consumers.

Despite the absence of technical barriers to providing more comprehensive consumer information on rollover, the protracted history of NHTSA's rulemaking initiatives on rollover suggests that the agency may encounter difficulties in obtaining support for its actions from all the major stakeholders. Furthermore, vehicle manufacturers, consumer groups, and others involved in vehicle testing are likely to incur additional costs when NHTSA introduces dynamic testing related to rollover. For these reasons, the committee concludes that consumer information on rollover that captures both static measures and dynamic test results probably will not be available in the near future.

The current rollover resistance ratings are likely to be of limited use to the public because of the way in which information on SSF is delivered. However,

SSF may form a reasonable initial basis for developing consumer information on rollover until additional measures based on both static metrics and dynamic testing become available.

Recommendation 1

NHTSA should vigorously pursue its ongoing research on driving maneuver tests for rollover resistance, mandated under the TREAD Act, with the objective of developing one or more dynamic tests that can be used to assess transient vehicle behavior leading to rollover.

Recommendation 2

In the longer term, NHTSA should develop revised consumer information on rollover that incorporates the results of one or more dynamic tests on transient vehicle behavior to complement the information from static measures, such as SSF.

Recommendation 3

NHTSA should investigate alternative options for communicating information to the public on SSF and its relationship to rollover. In developing revised consumer information, NHTSA should

- Use a logit model as a starting point for analysis of the relationship between rollover risk and SSF.
- Consider a higher-resolution representation of the relationship between rollover risk and SSF than is provided by the current five-star rating system.
- Continue to investigate presentation metrics other than stars.
- Provide consumers with more information placing rollover risk in the broader context of motor vehicle safety.

1
Introduction

Motor vehicle rollovers have been a source of concern for more than 30 years, not only because of the resulting fatalities and injuries, but also because they carry a relatively high risk of occupant death or injury as compared with other types of crashes. In 1999, 10,142 people were killed in light-vehicle[1] rollovers—almost a quarter of the 41,717 traffic crash victims in the United States for that year.[2] During the period 1995–1999, 7 percent of light-vehicle tow-away crashes involved rollover, but these crashes accounted for 31 percent of light-vehicle occupant fatalities (Kratzke 2001). The risk of death or injury is particularly high for single-vehicle rollovers, which represent approximately 80 percent of light-vehicle rollover crashes (Garrott and Boyd 2001). The Insurance Institute for Highway Safety (2000, 1) has noted that "single-vehicle crashes involving rollover accounted for 43 occupant deaths per million registered passenger vehicles in 1999, compared with 10 deaths per million in multiple-vehicle crashes." In 1999, 8,345 people were killed in single-vehicle rollovers, representing 26 percent of all light-vehicle occupant fatalities[3] for that year, and during the period 1995–1999, an average of 19,000 people annually suffered severe injuries in such crashes (Garrott and Boyd 2001). These data indicate that a reduction in light-vehicle rollovers—particularly those involving single vehicles—would likely lead to a decrease in the total numbers of occupant deaths and injuries resulting from motor vehicle crashes.

All automobile crashes—including rollovers—are complex events. Three main factors, and interactions among them, contribute to a crash: the driver, the driving environment (e.g., weather and road conditions, time of day), and the vehicle. Most experts acknowledge that reductions in the number of deaths and the number and severity of injuries associated with rollover likely would result from a combination of

- Changes in driver behavior, notably an increase in seat belt use;
- Design improvements in both roadsides and roadside structures, particularly in rural areas; and

[1] Light vehicles are defined by the National Highway Traffic Safety Administration (NHTSA) as the combination of (1) passenger cars and (2) multipurpose passenger vehicles under 10,000 pounds gross vehicle weight rating.

[2] Fatality data taken from the Fatality Analysis Reporting System (FARS) for 1999.

[3] Rollover-related fatalities are not evenly distributed across vehicle classes. In 1999, single-vehicle rollover crashes accounted for 51 percent of occupant deaths in sport utility vehicles, compared with 36 percent of deaths in pickups and 19 percent of deaths in cars (IIHS 2000).

• Vehicle modifications that would reduce the likelihood of rollover and provide additional occupant protection should rollover occur.[4]

Policy decisions about the need for and scope of federal government action in one or more of the above areas—and about relative priorities among the three areas—involve complex technical, social, and financial considerations. The present study was requested by Congress to inform its investigation of the rollover issue, with particular emphasis on the potential role of vehicle characteristics and related consumer information in achieving a reduction in rollover-related deaths and injuries. Public Law 106-346 (Department of Transportation and Related Agencies Appropriations Act, 2001) requires the U.S. Department of Transportation to fund a study by the National Academy of Sciences on "whether the static stability factor [SSF][5] is a scientifically valid measurement that presents practical, useful information to the public, including a comparison of the [SSF] test versus a test with rollover metrics based on dynamic driving conditions that may induce rollover events."[6]

NATIONAL HIGHWAY TRAFFIC SAFETY ADMINISTRATION'S INITIATIVES ON ROLLOVER

The National Highway Traffic Safety Administration's (NHTSA's) formal initiatives on rollover began in 1973 with the issuance of an advance notice of proposed rulemaking for a safety standard that would specify minimum performance requirements for rollover resistance. A related program of research was undertaken to investigate the handling and stability of different types of vehicles in severe steering maneuvers associated with untripped rollovers.[7] Action on the proposed rollover resistance standard was terminated in 1978 because untripped rollover was found to be difficult to predict and to accomplish in tests, even on highly skid-resistant surfaces. Computer simulation of dynamic testing was tentatively identified as a more repeatable alternative to full-scale track testing (*Federal Register* 2000).

In the late 1980s, several groups and individuals renewed efforts to persuade NHTSA to develop a safety standard for rollover resistance. A 1986 petition by Congressman Wirth asked NHTSA to establish a standard based on

[4] The characteristics and features of a motor vehicle that affect its safety can be classified into two broad categories: those helping the driver avoid a crash (crash avoidance) and those helping to protect vehicle occupants from harm during a crash (crashworthiness) (TRB 1996).

[5] SSF is briefly defined later in this chapter; detailed technical discussion of its meaning and use is provided in Chapter 2.

[6] The full text of the congressional request is given in Appendix A.

[7] Untripped rollovers are defined by NHTSA as those for which there is no apparent tripping mechanism—such as a curb or roadside feature—other than normal surface friction. Tripped rollovers are defined as those resulting from contact with a mechanical obstacle (tripping mechanism) such as a curb or other surface irregularity. NHTSA's classification of rollovers as either tripped or untripped is discussed in Chapters 2 and 3.

a minimum allowable value of SSF. This request was denied on the grounds that the proposed approach would "neither adequately encompass the causes of vehicle rollover nor satisfactorily ameliorate the problem," although NHTSA acknowledged that "a vehicle's stability factor has some relation to its overall involvement in rollover accidents" (*Federal Register* 1987). A 1988 petition by Consumers Union for a safety standard to protect vehicle occupants against "unreasonable risk of rollover" led to a 5-year vehicle and data analysis program during which NHTSA studied more than 100,000 single-vehicle rollover crashes.

In response to the requirements of the 1991 Intermodal Surface Transportation Efficiency Act, NHTSA issued an advance notice of proposed rulemaking for a minimum performance standard for rollover resistance. In 1994, this rulemaking effort was terminated on the grounds that a standard based on static vehicle measurements "would not appreciably decrease crash fatalities and injuries in rollovers" (*Federal Register* 2000). Similar reasons were cited in NHTSA's 1996 denial of a petition from Advocates for Auto and Highway Safety and the Insurance Institute for Highway Safety to reconsider the termination of rulemaking on a rollover standard. In addition, the agency noted that such a standard would eliminate a popular vehicle type—the compact sport utility vehicle (SUV).

The 1994 notice from NHTSA terminating work on the development of a rollover standard also proposed a new consumer information regulation requiring manufacturers to label vehicles with information on rollover stability based on either tilt table angle or critical sliding velocity.[8] After 20 years spent considering various options for a rollover standard, NHTSA shifted its focus to consumer information, and has pursued this approach ever since.

In September 1994, Congress requested a study by the National Academy of Sciences on the communication of vehicle safety information to consumers, and required NHTSA to review the results of that study before issuing a final rule on vehicle rollover labeling. Following publication of the study report, *Shopping for Safety* (TRB 1996), and a revised rulemaking proposal from NHTSA, a final rule on a modified SUV rollover warning label was issued in 1999 (CFR 1999).[9] Under the new rule, utility vehicles with a wheelbase of 110 inches or less are required to have the rollover alert label shown in Figure 1-1 on the driver side sun visor.

In parallel with its efforts during the late 1990s to develop a revised SUV rollover warning label, NHTSA initiated a project to develop a dynamic test for rollover and control stability in light vehicles. This action was taken, in part, in response to a petition from Consumers Union asking the agency

[8] A discussion of static vehicle metrics, including tilt table angle and critical sliding velocity, is provided in Chapter 2.

[9] Before this rulemaking, small and mid-sized SUVs were required to have a text-only warning label; guidelines were provided for label size, style, and content. For the modified warning label, the use of graphics, bright colors, and short bulleted text messages is mandatory.

FIGURE 1-1 Rollover alert label. (SOURCE: CFR 1999.)

to develop a test of vehicle emergency handling and to provide test results on new vehicles to the public as consumer information. In July 1999, NHTSA published the results of its research on dynamic emergency handling maneuvers that can induce on-road, untripped rollover (Garrott et al. 1999). The agency concluded that "several maneuvers appear to be able to discriminate between vehicles [that have] low static and dynamic rollover propensity measures and those that do not."

NHTSA's work on dynamic testing is continuing in response to the requirements of the Transportation Recall Enhancement, Accountability, and Documentation (TREAD) Act of November 2000 (Public Law 106-414). This legislation requires NHTSA to develop a dynamic test for consumer information on rollover, conduct appropriate tests, and determine how best to disseminate the resulting information to the public. These actions are to be completed by November 1, 2002. In July 2001, NHTSA issued a request for comment on its plans to evaluate several driving maneuver tests for rollover resistance in accordance with the requirements of the TREAD Act (*Federal Register* 2001b).

In June 2000, NHTSA issued a request for comments on a proposed rollover consumer information program based on SSF (*Federal Register* 2000). As noted in the request for comments, this recent initiative reflects a change in NHTSA's focus from untripped to tripped rollovers, and a resulting reassessment of the agency's previous view (*Federal Register* 1987) regarding the efficacy of SSF:

> Since the vast majority of rollovers are tripped, we have now decided that primary consumer information should be based on factors relevant to tripped as well as untripped rollover, and we have reconsidered the merits of Static Stability Factor as an indicator of rollover risk for consumer information. (*Federal Register 2000*)

Crash reports in the National Automotive Sampling System Crashworthiness Data System distinguish between tripped and untripped rollovers,

although it is generally acknowledged that practical difficulties in interpreting field data can make such a distinction difficult (Woodill and Brophy 2001). According to NHTSA's National Center for Statistics and Analysis, the vast majority of rollovers are tripped.[10] An average of 7,866 untripped rollovers occurred annually during the period 1992–1996, constituting approximately 4 percent of all rollover crashes involving cars, light trucks, and vans (*Federal Register 2000*).

NHTSA's STAR RATINGS FOR ROLLOVER RESISTANCE

In January 2001, NHTSA issued its final rule to provide consumers with star ratings for rollover resistance based on SSF (*Federal Register* 2001a). The definitions of the star ratings are given in Box 1-1. A five-star rating indicates the highest rollover resistance and a one-star rating the lowest. The ratings provide an estimate of the probability of rolling over in a single-vehicle crash, but do not predict the likelihood of that crash or the type or severity of injuries expected.

Rollover resistance ratings for several vehicles have been incorporated into NHTSA's New Car Assessment Program (NCAP). This program is the main source of information on motor vehicle safety made available to consumers by the federal government. NCAP provides information on frontal

BOX 1-1
NHTSA's Rollover Resistance Ratings

In a single-vehicle crash, a vehicle with a rating of

Five stars	★★★★★	has a risk of rollover of less than 10 percent.
Four stars	★★★★	has a risk of rollover between 10 percent and 20 percent.
Three stars	★★★	has a risk of rollover between 20 percent and 30 percent.
Two stars	★★	has a risk of rollover between 30 percent and 40 percent.
One star	★	has a risk of rollover greater than 40 percent.

SOURCE: *Federal Register* 2001a.

[10] As discussed in Chapters 2 and 3, this report is not concerned with making the distinction between tripped and untripped rollovers.

and side crash ratings, as well as rollover resistance ratings, for the most popular light vehicles (passenger cars, SUVs, light trucks, and vans). Each of the individual ratings uses the star system, with five stars indicating the best performance and one star the worst.

In general, SUVs receive between one and three stars for rollover resistance, pickup trucks between one and four stars, vans two or three stars, and passenger cars four or five stars. The rollover information on NHTSA's website (www.nhtsa.dot.gov) includes guidance on interpreting the ratings, and notes that, "[as with] side crash ratings, it is possible to compare vehicles from different classes when looking at rollover resistance ratings." Information is provided on what consumers can do to reduce rollover risk; the importance of wearing a seat belt to reduce the risk of death or serious injury in a rollover crash is emphasized. The value of SSF, which as noted forms the foundation for NHTSA's ratings for rollover resistance, is listed for each rated vehicle.

Static Stability Factor

The SSF of a vehicle is defined as its track width, T, divided by twice its center of gravity height, H; i.e., SSF = $T/2H$. The at-the-curb value of H is typically just over 20 inches for a passenger car and several inches higher for an SUV. The corresponding values of SSF are approximately 1.35–1.45 for passenger cars and 1.05–1.20 for SUVs (Heydinger et al. 1999). Typically, loading the vehicle changes the center of gravity height. For many SUVs, the center of gravity height increases—and SSF decreases—when the vehicle is loaded because the loads are placed above the center of gravity of the empty vehicle. For many passenger cars, loading results in a minimal change in center of gravity height and SSF (Heydinger et al. 1999).

According to NHTSA's analyses of 220,000 actual single-vehicle crashes, taller, narrower vehicles, such as SUVs, are more likely than lower, wider vehicles, such as passenger cars, to trip and roll over (NHTSA 2001). NHTSA's five-star rollover resistance rating system is based on a statistical correlation between SSF and probability of rollover in a single-vehicle crash, as determined from crash data (*Federal Register* 2000, 2001a). The number of stars awarded to a vehicle depends on the value of SSF, as shown in Table 1-1.

TABLE 1-1 Relationship Between NHTSA's Rollover Resistance Star Ratings and SSF Values

Star	*SSF*	*Comments*
1	1.03 or less	
2	1.04–1.12	Typical SSF values
3	1.13–1.24	for SUVs
4	1.25–1.44	Typical SSF values
5	1.45 or more	for passenger cars

Reactions to the Ratings

Automobile manufacturers and some consumer groups have expressed concern about NHTSA's decision to base the five-star ratings for rollover resistance on SSF alone (see, for example, Alliance of Automobile Manufacturers 2000; Consumers Union 2000), and view the use of a purely static metric, with no consideration of dynamic vehicle behavior, as a serious deficiency in NHTSA's ranking of rollover propensity. During its meetings with representatives of automobile manufacturers, the committee established that SSF is one of many metrics—both static and dynamic—that are taken into consideration in optimizing overall vehicle performance. The meaning and use of a variety of static vehicle metrics, as well as features of dynamic testing, are discussed in Chapter 2.

The Alliance of Automobile Manufacturers (2000) has further criticized NHTSA's rollover resistance ratings on the grounds that *(a)* the ratings are based on flawed statistical analyses, and *(b)* consumers are likely to be misled and confused by the star rating system. These issues are addressed in Chapters 3 and 4, respectively.

As noted during presentations to the committee (see Appendix B), other groups, including Advocates for Highway and Auto Safety (2000) and Public Citizen (2001), have acknowledged NHTSA's rollover resistance rating system as a step in the right direction from the consumer's perspective, but regard it as insufficient to protect the American public from the injuries and fatalities resulting from rollover crashes. Some of these groups believe a rollover performance standard that reduced the likelihood of rollover would be more effective than consumer information in addressing the fundamental causes of the rollover problem. The committee was unable to obtain any empirical data on the reactions of consumers themselves to NHTSA's rollover resistance ratings, other than limited information on visits to the rollover sections of the agency's website (see Chapter 4).

CONSUMER INFORMATION ON MOTOR VEHICLE SAFETY

Meeting Consumer Needs

As noted earlier, in 1994 Congress requested that the National Academy of Sciences conduct an independent study of consumer needs for automotive safety information. The authors of the resulting report, *Shopping for Safety* (TRB 1996), recommended a number of short-term improvements to existing automotive safety information, as well as the longer-term development of new summary measures to provide consumers with comparative safety information on overall vehicle performance. Such summary measures were identified as potentially more helpful than currently used data in informing consumers' vehicle

buying decisions. Progress on developing summary measures and their relevance in informing the public about rollover are discussed briefly in Chapter 4.

Stimulating Improvements in Vehicle Safety

One of the most important effects of consumer information is that it stimulates manufacturers to modify their products. In the field of automotive safety, NCAP scores for crashworthiness have improved steadily since the program's inception in 1978, with the largest improvements coming early on. A real-world reduction in the likelihood of fatality for drivers involved in head-on crashes similar to those simulated by the NCAP test is attributed, at least in part, to the NCAP program (TRB 1996). The Insurance Institute for Highway Safety's frontal offset crash test program also has resulted in significant improvements in vehicle design; among 32 updated vehicle designs tested since 1995, 20 have obtained improved ratings (IIHS 2001).

The incorporation of a rollover resistance rating into NCAP could result in automobile manufacturers modifying vehicle designs to obtain higher ratings for their products. Five-star NCAP crash ratings are often featured by manufacturers when marketing vehicles to safety-conscious consumers. However, it is essential to avoid unintended—and detrimental—consequences in modifying a vehicle to improve a single aspect of its performance. The numerous and complex trade-offs involved in the vehicle design and development process make improving safety overall particularly challenging. Vehicle designers must ensure that vehicles remain safe in a wide range of maneuvers while also endeavoring to respond to consumer preferences regarding vehicle ride and handling. In light of the numerous factors that contribute to overall vehicle safety, techniques such as quantitative risk assessment (see Box 1-2) may be helpful in informing decisions about vehicle safety initiatives[11] and placing individual risks in their proper context.

An improvement in rollover resistance could degrade other aspects of vehicle performance and compromise occupant safety in a variety of nonrollover driving scenarios. For example, several manufacturers have pointed out to NHTSA that some changes designed to improve a vehicle's tilt table performance[12] could degrade its control and handling attributes (*Federal Register* 2000). Similarly, the likelihood of experiencing two-wheel lift in an obstacle-avoidance maneuver[13] can be reduced by fitting very "slippery" tires, which also result in a loss of directional control and severe difficulty in steering the vehicle around bends, corners, or obstacles. Nevertheless, experience with the NCAP frontal and side crash ratings and the Insurance Institute for Highway

[11] The use of consumer information, as opposed to regulation, may not lead to optimal outcomes (see, for example, TRB 1996, Chapter 4).

[12] An explanation of tilt table metrics is given in Chapter 2.

[13] Obstacle avoidance maneuvers are discussed in Chapter 2.

BOX 1-2
Quantitative Risk Assessment

The large number of vehicles and their accident histories provides analysts with a robust database for conducting studies on how to improve vehicle safety. Generally, an analysis of accident statistics leads to an understanding of the factors contributing to accidents and provides important insights for improving future designs of vehicles, roads, and driver training programs. The committee used statistical analysis in assessing NHTSA's rollover resistance rating system.

The committee briefly considered alternatives to the analysis of accident statistics for developing insights on how to improve vehicle safety—alternatives that do not depend on an extensive accident history. The analysis technique known as quantitative risk assessment (QRA) was developed to assess the likelihood of major accidents involving nuclear power plants for which there is little or no accident history. The foundations of QRA are rooted in uncertainty analysis and probability theory (see, for example, Garrick and Kaplan 1995). The technique has contributed to improved safety of nuclear facilities throughout the world, and also has proved to be a powerful analytical tool for improving safety in other fields, including marine, chemical, space, defense, and transportation systems.

Future studies addressing broad issues of vehicle safety could benefit from the use of the QRA thought process for scenarios for which there is little or no experience—for example, the impact of new vehicle types on the national vehicle mix or the influence of innovative highway systems on traffic flows. Vehicle manufacturers and government agencies involved in transportation likely would find QRA helpful in analyses of future systems and associated impacts on public safety.

Safety's frontal offset crash rating indicates it is possible for vehicles to achieve good ratings in several categories simultaneously.

STUDY APPROACH AND ORGANIZATION OF REPORT

To respond to the congressional study request contained in Public Law 106-346, the Committee for the Study of a Motor Vehicle Rollover Rating System undertook three main tasks:

- A comparison of the information provided by the SSF static metric with that obtained from tests of dynamic vehicle performance;

- An assessment of whether SSF is a valid measure of vehicle rollover propensity, as indicated by the involvement of vehicles with a range of SSF values in actual rollover crashes; and
- An assessment of whether vehicle test results, both static and dynamic, can be interpreted and used by consumers in making informed decisions about vehicle purchases.

The vehicle dynamics of rollover is described in Chapter 2, which also includes discussion of static measures and dynamic vehicle testing. The mandate for this study did not require the committee to comment on NHTSA's dynamic vehicle testing activities under the TREAD Act or to recommend one or more dynamic vehicle tests as a basis for consumer information on rollover. Within the context of its charge, however, the committee has provided some comments on the use of dynamic testing in investigating rollover crashes and the associated challenges. Although not specifically asked to do so by Congress, the committee has also included in this chapter comments on the relevance of electronic stability control systems to rollover, in response to a request from NHTSA.

Chapter 3 presents the committee's review of the statistical analyses used by NHTSA as the foundation for its five-star rating system for rollover resistance. Statistical analyses of rollover crash data have been conducted by Exponent Failure Analysis Associates, Inc. (Exponent) at the request of the Alliance of Automobile Manufacturers (Donelson et al. 2000; Donelson and Ray 2001). The committee has considered these studies within the broad context of its assessment, but a detailed commentary on Exponent's methodology and results was judged to be beyond the scope of the present study.

The committee's assessment of NHTSA's consumer information on rollover is presented in Chapter 4. In the absence of empirical data on consumers' use of this information, the committee assessed the practicality and usefulness of the rollover resistance ratings by extrapolating from research on a range of consumer products, using its judgment, and evaluating the process used by NHTSA to develop the ratings. The committee's assessment also draws on the findings and recommendations of the Committee for the Study of Consumer Automotive Safety Information, which prepared the report *Shopping for Safety* (TRB 1996).

Finally, the committee's major findings and recommendations for a future approach are presented in Chapter 5.

REFERENCES

Abbreviations

CFR	Code of Federal Regulations
IIHS	Insurance Institute for Highway Safety
NHTSA	National Highway Traffic Safety Administration
TRB	Transportation Research Board

Advocates for Highway and Auto Safety. 2000. Comments on Docket No. NHTSA-2000-6859.

Alliance of Automobile Manufacturers. 2000. Comments on Docket No. NHTSA-2000-6859.

CFR. 1999. Consumer Information Regulations, §575.105 Vehicle Rollover. Title 49, Part 575.

Consumers Union. 2000. Comments on Docket No. NHTSA-2000-6859.

Donelson, A.C., F. Forouhar, and R.M. Ray. 2000. *The Relative Importance of Factors Related to the Risk of Rollover Among Passenger Vehicles*. Report prepared by Exponent Failure Analysis Associates, Inc., Menlo Park, Calif., and included as Appendix 4 to comment from the Alliance of Automobile Manufacturers on Docket No. NHTSA-2000-6859.

Donelson, A.C., and R.M. Ray. 2001. *Motor Vehicle Rollover Ratings: Toward a Resolution of Statistical Issues*. Report prepared for the Alliance of Automobile Manufacturers by Exponent Failure Analysis Associates, Inc., Menlo Park, Calif.

Federal Register. 1987. Federal Motor Vehicle Safety Standards; Denial of Petition for Rulemaking; Vehicle Rollover Resistance. Vol. 52, No. 249, Dec. 29, pp. 49,033–49,038.

Federal Register. 2000. Consumer Information Regulations; Federal Motor Vehicle Safety Standards; Rollover Prevention; Request for Comments. Vol. 65, No. 106, June 1, pp. 34,998–35,024.

Federal Register. 2001a. Consumer Information Regulations; Federal Motor Vehicle Safety Standards; Rollover Resistance; Final Rule. Vol. 66, No. 9, Jan. 12, pp. 3,388–3,437.

Federal Register. 2001b. Consumer Information Regulations; Federal Motor Vehicle Safety Standards; Rollover Prevention; Request for Comments. Vol. 66, No. 128, July 3, pp. 35,179–35,193.

Garrick, B.J., and S. Kaplan. 1995. Summary Report: A Risk-Based Approach to the Evaluation and Application of Disarmament Strategies and Technologies. North Atlantic Treaty Organization Advanced Workshop, Visegrád, Hungary, May 19–23.

Garrott, R.W., and P. Boyd. 2001. A Progress Report on Development of a Dynamic Rollover Rating Test. Presented at the Society of Automotive Engineers Government/Industry Meeting, May 14–16.

Garrott, R.W., J.G. Howe, and G. Forkenbrock. 1999. *An Experimental Investigation of Selected Maneuvers That May Induce On-Road Untripped, Light Vehicle Rollover—Phase II of NHTSA's 1997–1998 Vehicle Rollover Research Program*. NHTSA, Vehicle Research and Test Center, East Liberty, Ohio.

Heydinger, G.J., R.A. Bixel, W.R. Garrott, M. Pyne, J.G. Howe, and D.A. Guenther. 1999. Measured Vehicle Inertial Parameters—NHTSA's Data

Through November 1998, SAE 1999-01-1336. Presented at International Congress and Exposition, Detroit, Mich., March.

IIHS. 2000. Fatality Facts: Passenger Vehicles. Arlington, Va.

IIHS. 2001. Crashworthiness Keeps Getting Better. Status Report, Vol. 36, No. 3, Arlington, Va.

Kratzke, S. 2001. Light Vehicle Rollover: Background on NHTSA's Activities in This Area. Presented to the Committee for the Study of a Motor Vehicle Rollover Rating System, Washington, D.C., April 11.

NHTSA. 2001. Frequently Asked Questions About Rollover Resistance Ratings. www.nhtsa.dot.gov/hot/rollover/Index.html.

Public Citizen. 2001. Avoidable Deaths and Avoidable Shame: The Dire Need for Vehicle Rollover Prevention and Crashworthiness Standards. Presented by Joan Claybrook to the Committee for the Study of a Motor Vehicle Rollover Rating System, Washington, D.C., May 29.

TRB. 1996. *Special Report 248: Shopping for Safety: Providing Consumer Automotive Safety Information*. National Research Council, Washington, D.C.

Woodill, R., and J. Brophy. 2001. Collection of NASS CDS Data Relating to Rollover. Presented to the Committee for the Study of a Motor Vehicle Rollover Rating System, Washington, D.C., May 29.

2
Vehicle Dynamics

Vehicle rollover is a complex event that has been the subject of many investigations since the 1950s.[1] The term "rollover" describes the condition of at least a 90-degree rotation about the longitudinal axis of a vehicle.[2] When lateral forces create a large enough roll moment about the vehicle's center of gravity for a sufficient length of time, the vehicle will roll over. These lateral forces can be generated under a variety of conditions, such as contact with a mechanical obstacle (a curb, pothole, or furrow plowed during an off-road maneuver), or during maneuvers on the roadway.

A wide variety of testing has been performed in an effort to understand rollover. Vehicle tests and simulations typically deal with the onset of rollover rather than a full 90-degree roll. Testing generally falls into one of two categories:

- *Static testing* is performed in the laboratory. It may involve the measurement of vehicle parameters (e.g., center of gravity height, track width) that are then combined to yield static metrics related to a vehicle's rollover propensity—for example, static stability factor (SSF). Alternatively, static tests of entire vehicles, such as the tilt table and side pull tests described later in this chapter, may be performed to obtain data that can be correlated with a vehicle's rollover propensity.
- *Dynamic testing* is performed on a test track and involves driving maneuvers. Although dynamic tests are potentially helpful in understanding the events immediately preceding rollover, they are expensive and require safety precautions for test drivers. Furthermore, repeatability may be difficult to achieve. In view of the challenges associated with dynamic testing, computer stimulations have been undertaken using mathematical models to predict vehicle behavior associated with rollover.

This chapter responds to the congressional request for "a comparison of the static stability factor test versus a test with rollover metrics based on dynamic driving conditions that may induce rollover events." Following some brief background, the chapter provides a review of static measures of rollover

[1] For a review of the literature on rollover, see Lund and Bernard (1995a).

[2] The Crashworthiness Data System (see Chapter 3) also classifies "end over end" rotation about the lateral axis of a vehicle as a rollover, contrary to the normal vehicle dynamics definition of the term. However, end-over-end rollovers typically constitute a very small proportion (on the order of 2 percent) of the total number of rollovers.

propensity, with particular emphasis on SSF. Discussion of the different phases of a rollover crash then illustrates the complementary nature of static measures and dynamic tests, and makes the case for dynamic testing. Next, some general comments are provided on dynamic testing and the associated challenges facing the National Highway Traffic Safety Administration (NHTSA) in its task, mandated under the Transportation Recall Enhancement, Accountability, and Documentation (TREAD) Act, of developing dynamic tests pertinent to consumer information on rollover. The chapter concludes with the committee's findings and recommendations in the area of vehicle dynamics.

BACKGROUND

With few exceptions, vehicles that may roll over during a vehicle test are constrained by outriggers that prevent rollover. Test engineers define the onset of roll in a variety of ways. Most conservatively, the onset of roll is defined as at least one wheel leaving the ground during the course of a test; less conservative definitions require two-wheel liftoff or contact of the outriggers with the test pad.

From the viewpoint of simulation, the onset of rollover may also be determined in a variety of ways. The vehicle model leading to SSF characterizes the onset of rollover as a scenario in which the lateral forces become large enough that, if they continue long enough, rollover must result. As Figure 2-1 indicates, T is the track width (strictly, the average of the front and rear track widths), and H is the height of the vehicle's center of gravity. SSF is defined as the track width divided by twice the center of gravity height; i.e., SSF = $T/2H$. The theoretical basis for SSF calls for rollover if the sum of the lateral forces on the tires, divided by the weight of the vehicle, is greater than $T/2H$ for a sufficient length of time (Gillespie 1992).

Using more complex models, analysts focus on the instant when both of the normal forces between the tire and the road on one side of the vehicle drop to zero in the course of a given maneuver. Alternatively, incipient roll can be categorized by the instant in time when the vehicle's center of gravity moves beyond the balance point above the leading side tires, as illustrated in Figure 2-2.

Rollover events are sometimes classified as either tripped or untripped. A rollover that occurs as a result of forces on the tire created by a mechanical obstacle, such as a curb or other surface irregularity (e.g., a furrow plowed during an off-road maneuver), is described as tripped. In contrast, a rollover is described as untripped if the vehicle rolled solely as a result of the lateral forces created at a smooth tire–road interface. As discussed in Chapter 3, the National Automotive Sampling System Crashworthiness Data System categorizes rollovers as either tripped or untripped on the basis of interpretation of crash scene and vehicle inspections, as well as other supporting evidence. However, the physics governing the motion of vehicles reveals that it is the magnitude and duration of the forces on the vehicle that determine whether

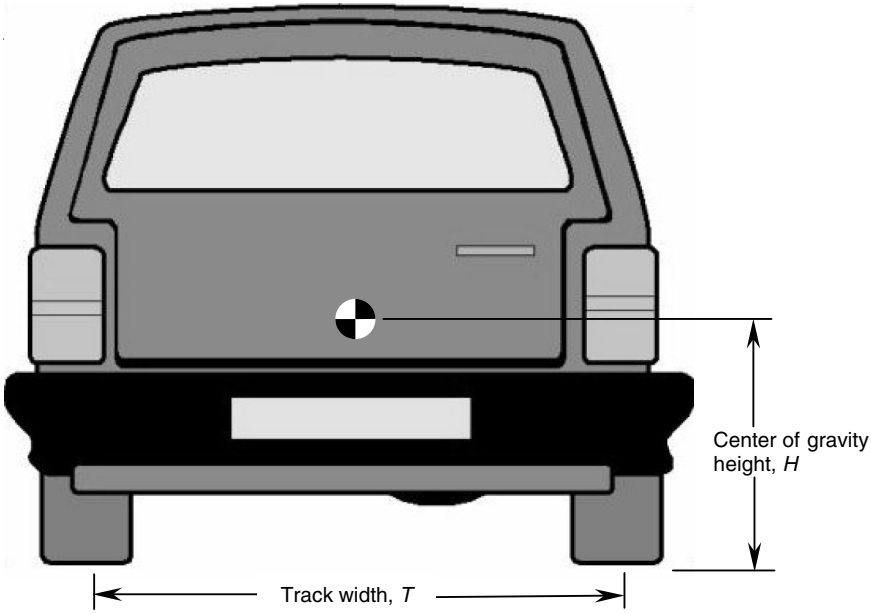

FIGURE 2-1 Important dimensions relating to SSF.

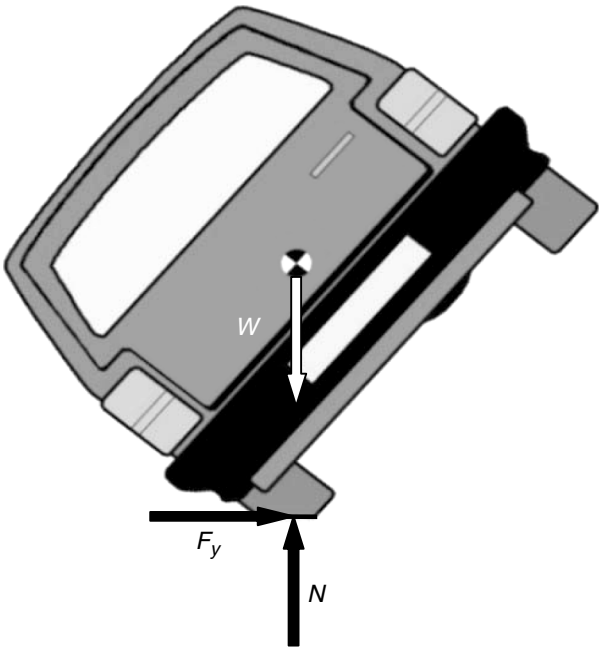

FIGURE 2-2 Vehicle at incipient rollover (the balance point). (NOTE: F_y = lateral force; N = normal force; W = weight of vehicle.)

a rollover will occur (see the later discussion of SSF). Therefore, the present discussion focuses on the magnitude of the forces rather than the mechanism of force generation, and is not concerned with making the distinction between tripped and untripped rollovers.

STATIC MEASURES OF ROLLOVER PROPENSITY

Several static measures and tests have been developed to characterize a vehicle's rollover propensity (see, for example, Lund and Bernard 1995b). The commonly cited measures fall into two categories:

- Quantities such as SSF and critical sliding velocity (CSV) that are calculated from measured vehicle parameters; and
- Quantities derived from tests of entire vehicles—notably the tilt table test, side pull test, and centrifuge test—that depend on experimental results instead of measurements of vehicle dimensions and inertial properties.

The following discussion addresses the advantages and disadvantages of these different static measures, with particular emphasis on SSF—the metric that forms the basis for NHTSA's star ratings for rollover resistance.

Static Stability Factor

When a vehicle has a velocity vector at a large angle from the direction in which it is aligned, the tire–road interface can generate large lateral forces on the tires, as illustrated in Figure 2-3. Assuming a rigid-body model, that is, a model that does not deflect under the influence of the applied forces, straightforward physics yields the insight that if the sum of the lateral forces on all four tires is large enough for a sufficiently sustained period of time, the vehicle will roll over. Note that the rigid-body model cannot predict time-dependent details of the rollover, which are scenario-specific. Simulation of time-dependent rollover requires a much more complex model (see, for example, Chrstos and Heydinger 1997).

In particular, the vehicle model predicts rollover if, for a sufficiently sustained period of time

$$\Sigma F > W(T/2H) \tag{1}$$

where W is the weight of the vehicle, ΣF indicates the sum of the lateral forces on all four tires, and $T/2H$ is the vehicle's SSF.

Relationship 1 is often viewed another way. Fundamental physics states that

$$\Sigma F = ma \tag{2}$$

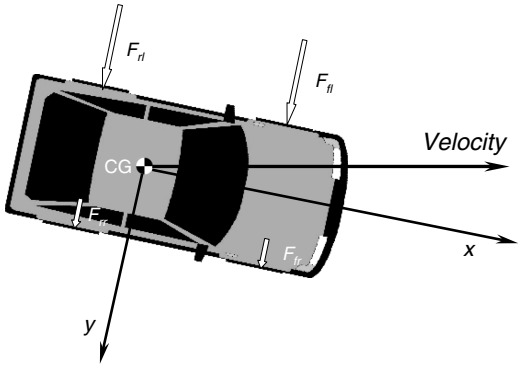

FIGURE 2-3 Lateral forces leading to rollover: plan view with steered wheels to the front. (NOTE: *xy* axis = vehicle coordinate axis; F_{rl} = lateral force on the rear left tire; F_{fl} = lateral force on the front left tire; F_{rr} = lateral force on the rear right tire; F_{fr} = lateral force on the front right tire; and CG = center of gravity.)

where a is the lateral acceleration, and m is the mass of the vehicle (= W/g, where g is the gravitational constant).

It follows directly from Relationship 1 and Equation 2 that if, for a sustained period of time,

$$a/g > T/2H \tag{3}$$

the vehicle model will predict rollover. This relationship is a scientifically valid statement of the physics of the motion of this vehicle model and the cornerstone of the utility of SSF. In particular, the model predicts that rollover will occur when the lateral acceleration in g's exceeds the SSF for a sustained period of time.

Consider now Relationship 3 in the context of a smooth road surface. For the scenario depicted by Figure 2-3, it is common to characterize the relationship between the lateral forces on the tires and the normal load upward on the tires by a coefficient of friction, μ. This can be stated as

$$\Sigma F = \mu W \tag{4}$$

That is, the sum of the lateral forces is equal to the product of a tire–road friction coefficient, μ, and the weight of the vehicle. In this case, Relationship 1 yields the information that if, for a sustained period of time,

$$\mu > T/2H \tag{5}$$

rollover will occur. For a good dry paved surface, μ may be in the neighborhood of 0.9; for a wet or icy surface, μ is considerably less.

The importance of Relationship 5 is that if situations such as that depicted in Figure 2-3 continue for a long enough period of time, the model yields rollover if the friction coefficient characterizing the tire–road interface exceeds the SSF. If μ is relatively low, as on a wet or icy road, the vehicle will slide rather than roll because the lateral forces will be small, and the lateral accelerations will be far less than $T/2H$. In other scenarios not involving a smooth road surface, the large lateral forces resulting in rollover can be generated by interactions between the tire(s) and a curb, a pothole, a roadside slope, a furrow plowed during an off-road maneuver, or some other tripping mechanism.

The model that leads to Relationships 3 through 5 presumes that the vehicle is a rigid body. For real vehicles, rollover is expected in maneuvers that are less severe than called for by Relationships 3 through 5 because T is reduced as a result of lateral compliance of the suspension and tires, suspension kinematics (geometry changes), and body roll. In addition, for large roll angles, H can be increased by suspension kinematics. In particular, the lateral acceleration that, in time, produces rollover is lower than the level called for by Relationship 3. Thus for a real vehicle, Relationship 5 indicates that rollover is expected even if μ is less than $T/2H$. In each case, a 15 percent lower rollover threshold is a reasonable expectation, with the variation among particular vehicles being significant (Lund and Bernard 1995b).

More detailed mathematical models can yield information about the decrease in lateral acceleration that causes rollover compared with the value indicated by SSF. In a generic sense, simple additions to the model that yields SSF give an indication of the likely decrease (see, for example, Bernard et al. 1989). However, the provision of information applicable to specific vehicles requires far more detail. Furthermore, implementing vehicle-specific details in a complex simulation involves a great deal more time and expense than testing the vehicle itself. Thus the compelling feature of SSF, as seen in Relationships 3 through 5, is that it provides a clearly defined bound: if the sustained lateral acceleration exceeds this bound, rollover occurs. Follow-up analysis, not obvious from the preceding discussion, indicates that although the lateral acceleration in g's can exceed $T/2H$ for a short time without causing rollover, the more this acceleration exceeds $T/2H$, the less will be the time to rollover. Rollover events involving very large lateral accelerations far in excess of $T/2H$ g are sometimes classified as tripped rollovers.

Critical Sliding Velocity

Like SSF, CSV is calculated using measurements of vehicle parameters. CSV is an estimate of the minimum sideways velocity required for a vehicle to just barely tip over as a result of sliding sideways into a curb, as illustrated

schematically in Figure 2-4. [A simple derivation of CSV is presented by Meriam (1959) and Jones (1973), with slightly more complicated versions presented by Lund and Bernard (1995a).] Like SSF, CSV increases when track width increases and decreases when center of gravity height increases. A criticism of this measure is that it is based on the presumption of no energy loss after the collision with the curb, thus ignoring important losses in the suspensions (Gillespie 1992). Furthermore, in contrast to SSF, which is about equally sensitive to changes in T and H, CSV is much more sensitive to T than to H. This greater sensitivity derives from CSV's focus on curb trip as opposed to the more general focus of SSF—a vehicle sliding out of control on a smooth surface (Lund and Bernard 1995b).

Tilt Table Ratio

To determine tilt table ratio (TTR), the vehicle is positioned at rest on a table. As indicated by Figure 2-5, the table is tipped up until the (restrained) vehicle attempts to roll downhill. TTR is the tangent of the angle of the table when the front and rear wheels on the uphill side of the vehicle first lift up. If the suspension of the vehicle and its tires were rigid rather than compliant, the measurement of TTR would be the same as SSF.

Some believe TTR is a better measure than SSF and CSV because it includes some of the effects of the compliance of the suspensions and tires. Thus, TTR yields a lower threshold of minimum lateral acceleration needed to pro-

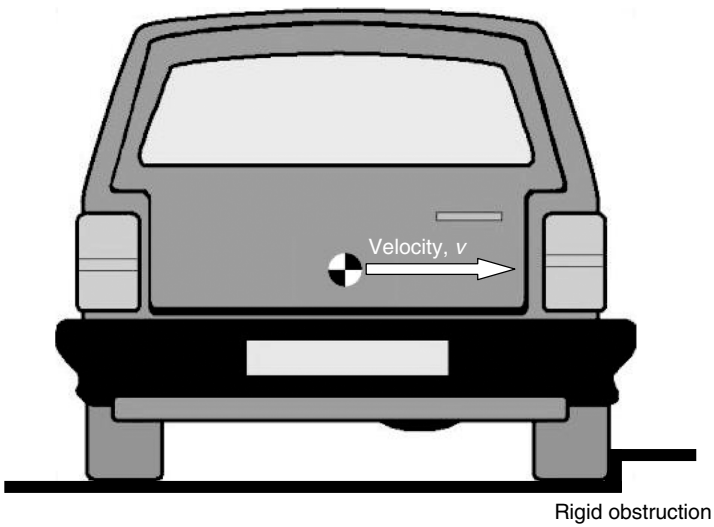

FIGURE 2-4 Configuration for use of critical sliding velocity.

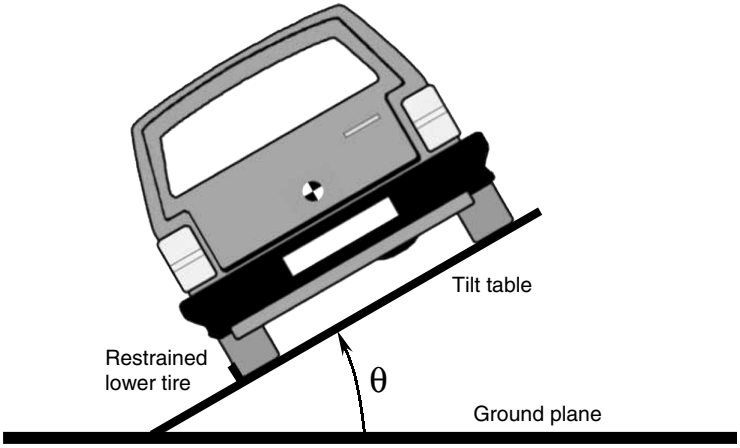

FIGURE 2-5 Tilt table test—tilt table ratio equals tangent of angle theta (θ).

duce a rollover than is the case with SSF. The flaw in the test is that as the table is tipped up, the total weight supported by the tires (perpendicular to the tilt table) drops, and the suspension tends to move into rebound (i.e., the suspension loads drop) and away from the curb equilibrium position. This in turn causes the vehicle center of gravity to move away from the tilt table, and thus makes the car more prone to rollover than it would be on a horizontal surface.

There is also a potential undesirable consequence of using TTR to assess rollover propensity. In some cases, measured TTR values can be increased by altering suspensions in a way that degrades vehicle directional response. In particular, best test results are obtained by having front and rear uphill wheels lift at the same time. This means vehicles with balanced front and rear roll stiffness will yield better TTR test results than otherwise similar vehicles with unequal roll stiffness, even though unequal roll couple distribution often produces improved dynamic performance (*Federal Register* 2001). Thus, a vehicle rating system that used TTR to rank rollover propensity could encourage undesirable design trade-offs and vehicles with inferior directional response characteristics.

Side Pull Test

The side pull test provides another static measure of vehicle rollover propensity; Figure 2-6 shows a schematic of a side pull test facility. In this case, test engineers pull the vehicle sideways with a horizontal force at the height of the vehicle's center of gravity. If there were no compliance in the suspensions and tires, the force required to tip the vehicle over, divided by the weight of the vehicle, would be the same as the SSF. Because of suspension and tire

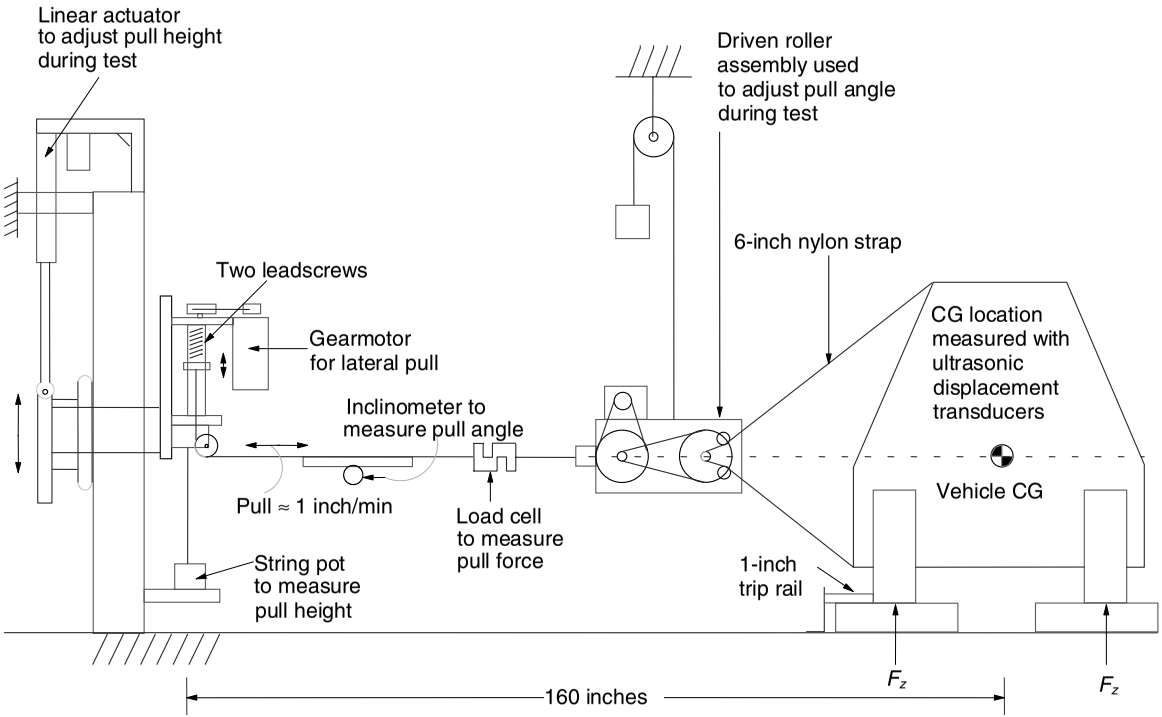

FIGURE 2-6 Schematic of side pull test facility. (NOTE: CG = center of gravity. SOURCE: *Federal Register* 2000.)

compliance, however, the side pull test yields results lower than SSF; in other words, it predicts a lower sustained lateral acceleration level required for vehicle rollover. As in the case of TTR, some believe the inclusion of suspension and tire compliances makes the side pull test superior to SSF. Detractors point out that the side pull test has one of the same flaws as TTR: it is possible in some cases to obtain improved results by making suspension changes that degrade the vehicle's directional response. Furthermore, the side pull test is difficult to perform.

Centrifuge Test

Another vehicle-based static measure of rollover propensity derives from the centrifuge test, illustrated in Figure 2-7. The centrifuge device uses an arm attached to a powered vertical shaft. The test vehicle is parked on a horizontal platform at the end of the arm. As the platform rotates, the parked vehicle is subjected to lateral acceleration. When the lateral acceleration is high enough, the vehicle will tip up against its restraints. If there were no compliance in suspensions and tires, the acceleration required to tip the vehicle up would be the same as that predicted by SSF. A positive aspect of this test is that, as with TTR and side pull, compliance in the tires and suspensions influences the measurements. This test also shares an important flaw with TTR and side pull: it is possible in some cases to obtain improved results by making suspension changes that degrade the vehicle's directional response (*Federal Register* 2001).

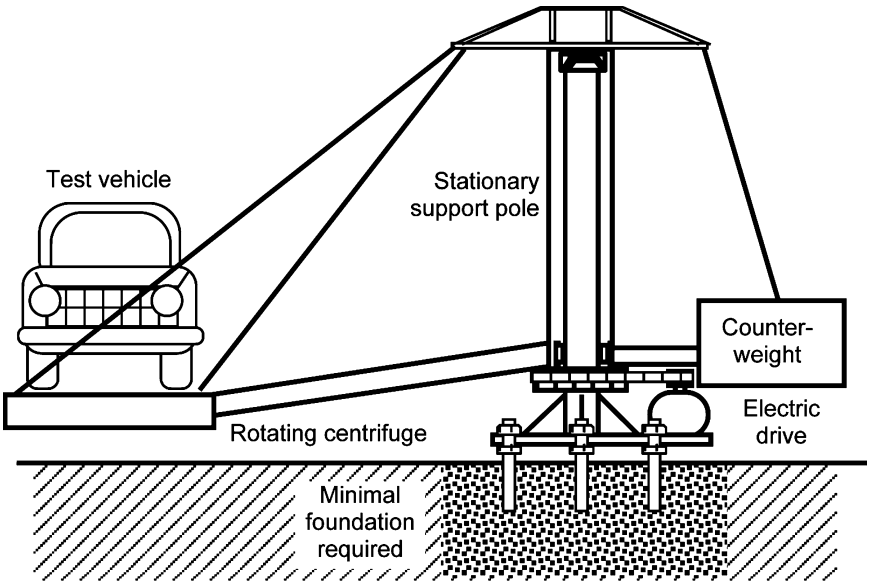

FIGURE 2-7 Schematic of centrifuge test. (SOURCE: *Federal Register* 2001.)

Summary

In summary, SSF is an important indicator of vehicle rollover propensity. Based on a rigid-body model of a vehicle, it relates easily measured vehicle parameters to a level of sustained lateral acceleration that leads to vehicle rollover. Real vehicles roll over at lower sustained levels of lateral acceleration than the accelerations predicted by SSF.

There are comparable static metrics derived from measurement of vehicle parameters (CSV, TTR) or from tests of entire vehicles (side pull and centrifuge tests). All things considered, SSF is preferable to CSV because its underlying model is better, and it has a wider range of applicability. Furthermore, unlike the tilt table, side pull, and centrifuge tests, SSF does not encourage vehicle designs that could, in some circumstances, lead to undesirable trade-offs affecting directional response.

There remains the concern that SSF is overly broad-brush because it does not address the question of how the vehicle might have gotten into situations such as that illustrated in Figure 2-3. In short, why did the vehicle start sliding sideways in the first place? And if the out-of-control vehicle had been equipped with a stability control system, would the vehicle have remained under control? These questions cannot be addressed by static measures; to resolve them, dynamic testing is required.

NEED FOR DYNAMIC TESTING

Both vehicle design and driver skill influence the way a vehicle handles in any maneuver. During transient maneuvers involving high lateral acceleration, many vehicle design parameters have been shown to have an effect on vehicle handling behavior (e.g., front-to-rear roll couple distribution, roll axis location, tire behavior, suspension characteristics, and roll resonant frequency, to name a few). The handling characteristics of the vehicle during such a maneuver have a significant influence on the ability of the driver to maintain control of the vehicle in an emergency situation. Under such circumstances, and before control of the vehicle is lost, there are significant differences among vehicles. These differences cannot be understood on the basis of static metrics.

Consider, for example, Figure 2-8. At the left side of the figure (Phase 1) the vehicle is under control. In the left section of the middle portion of the figure (Phase 2), both driver control inputs and vehicle characteristics determine the outcome of the maneuver. In this region, particularly at its very start where loss of control begins, all vehicle braking, acceleration, and handling characteristics could be important, depending on the control inputs selected by the driver. The driver inputs are limited to three: use of the steering wheel, the brake pedal, and the accelerator pedal. As loss of control progresses from mild to severe (the right section of the middle portion of Figure 2-8), driver inputs and vehicle design parameters become less important. Finally, the right

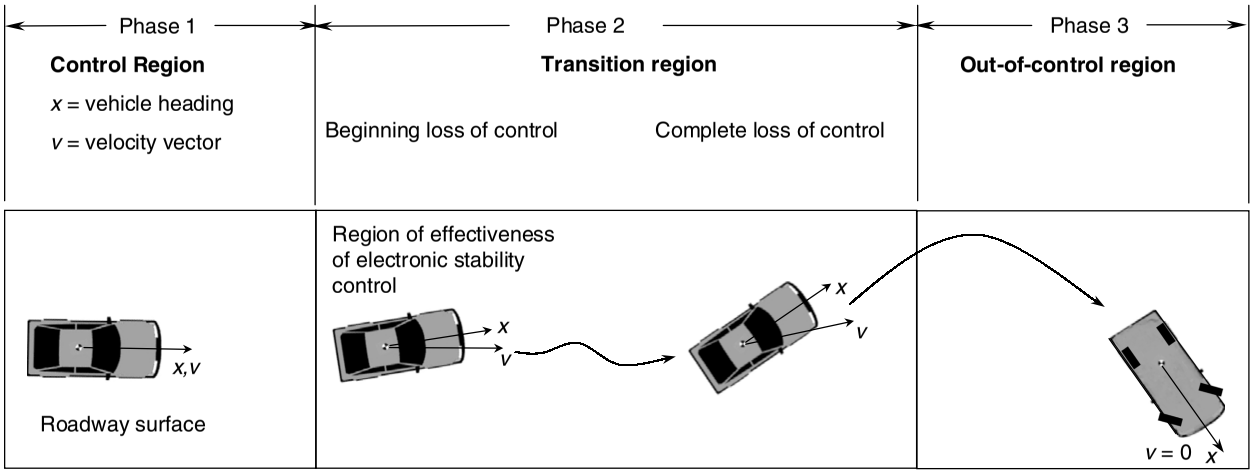

FIGURE 2-8 Phases of a rollover crash.

side of the figure (Phase 3) shows the vehicle out of control, in a situation analogous to that of Figure 2-3. Once the vehicle is in this configuration, SSF and the terrain over which the vehicle is moving are the dominant determinants of whether rollover will occur. The main motivation for dynamic testing is the need to understand the transition region of Figure 2-8, where driver actions, vehicle design, and such features as electronic stability control are important.

Electronic Stability Control

Some manufacturers are now offering computer-controlled systems that attempt to stabilize the vehicle early in the transition region of Figure 2-8. There are several trade names for these systems, but they all fall into the category of electronic stability control.

Electronic stability control systems monitor a vehicle's movement and the direction the driver is steering by measuring such items as steering wheel position, vehicle speed, and rate of rotation of the vehicle about its vertical axis (yaw rate). If the driver inputs and the vehicle response do not correspond, a computer attempts to enhance the driver's ability to maintain control of the vehicle by selectively braking individual wheel(s) or changing power applied to the wheels. These computer-adjusted control inputs[3] cause the vehicle to conform more closely to a trajectory estimated from vehicle sensors as that desired by the driver.

Electronic stability control systems are able to stabilize a vehicle only if there is sufficient reserve frictional capacity between the selected wheel or tire and pavement to generate a force at the tire in the right direction to stabilize the vehicle. The merit of these systems lies in preventing a vehicle from entering a situation leading to the out-of-control region in which rollover occurs (Phase 3 in Figure 2-8).

Static measures such as SSF do not provide information about the performance of electronic stability control systems. Such an assessment requires dynamic testing.[4]

Complementarity of Static Measures and Dynamic Testing

On the basis of discussions with a wide range of interested parties (see Appendix B), the committee concluded that there is broad agreement among informed constituencies that static metrics such as SSF are valuable in assessing a vehicle's rollover propensity. Nevertheless, because SSF does not provide

[3] Current systems involve selective braking and engine power reduction. Future systems are likely to include steering and selective power injection to individual wheels as well.

[4] The example of antilock brakes indicates that caution is needed in extrapolating the results of track testing to real-world experience.

insights into how vehicles get out of control, it cannot yield an understanding of a rollover crash in its entirety, from initiation to final outcome. Gaining this understanding requires investigation of the transition region illustrated in Figure 2-8.

DYNAMIC TESTING: FEATURES AND CHALLENGES

Important Features

The characteristics that distinguish dynamic testing from other vehicle tests are the transient nature of the controls applied to the vehicle and the vehicle's subsequent transient response. Dynamic tests can address one of three possible regimes: the normal driving range, which includes lateral accelerations up to about 0.3 *g* on a smooth, dry surface; the midrange of lateral acceleration, usually up to about 0.5 *g* on a smooth, dry surface; or the very high range of lateral acceleration. Typically, tests well above the range of 0.5 *g* of lateral acceleration on a dry surface are referred to as limit maneuvers, that is, maneuvers that test the limits of vehicle performance.

There is an important difference between testing in the range of normal driving and testing near the limits of vehicle performance. In the normal driving range, a few tests can provide information applicable to other scenarios in that range. In contrast, near the limits of vehicle performance, vehicle response to input controls is scenario-specific. In short, results from one test conducted near the limit of vehicle performance are not necessarily a reliable indicator of the results to be expected from another such test.

Dynamic testing, from the normal driving range through limit maneuvers, is pursued by every major automobile and truck manufacturer, various government and consumer agencies, and popular enthusiast magazines. The tests performed take different forms, reflecting the variety of interests of the test designers. Those interests determine why the tests are conducted, and include vehicle design, comparative evaluation of vehicles, regulatory development, and research.

Challenges

Section 12 of the TREAD Act directs NHTSA to "develop a dynamic test on rollovers by motor vehicles for a consumer information program; and carry out a program conducting such tests."[5] These tests will be limit maneuvers.

Since the results of all limit maneuvers depend on the particular scenario used for the test, the development of dynamic tests for rollover is challenging.

[5] A rulemaking is to be conducted to determine how best to disseminate the test results to the public. The rulemaking and test program are to be completed by November 1, 2002. A summary of NHTSA's findings to date is provided in the agency's July 2001 request for comments (*Federal Register* 2001).

The challenge is to choose scenarios that have broad applicability, with the understanding that the results do not cover all situations that could lead to rollover. An additional challenge is that vehicle manufacturers and consumer groups have experience with the tests they currently use.[6] They likely will be required to duplicate any new tests mandated at their own facilities. Such tests either will replace or will be added to current test protocols, and in either case, manufacturers, consumer groups, and others involved in vehicle testing will incur additional expense.

A further difficulty is that any test chosen and incorporated into regulations will influence manufacturers' designs. Given the complex trade-offs associated with vehicle design, NHTSA will be challenged to select one or more dynamic tests that will not have unintended detrimental consequences as manufacturers pursue a competitive advantage by designing to the test(s).

The tests recommended by NHTSA in response to the TREAD Act will need to be repeatable. That is, it will be expected that the tests can be repeated at the same track on the same day under nearly identical conditions with highly similar results. Furthermore, it will be desirable, though not expected, that the tests can be repeated with similar results from one test track to another. Reproducibility from track to track is problematic, however, because limit maneuvers are affected by environmental conditions. In particular, the coefficient of friction between the tires and the track varies from place to place.

In any discussion of the repeatability of the results of limit maneuver tests, an additional challenge arises: the need to choose between closed-loop and open-loop tests, each of which has its proponents. Some favor closed-loop tests, in which human drivers encounter situations that test roll stability. Others favor open-loop tests, in which the control inputs to the vehicle are predetermined and delivered to the vehicle in a highly repeatable way, often with a computer-based controller.

An advantage of closed-loop testing is that there can be a satisfying intuitive match between the tests and the challenges faced by human drivers. An example of such a test is the Consumers Union double-lane-change short-course avoidance maneuver, which is designed to simulate real-world situations in which a driver needs to avoid an obstacle in the road. This test is used to determine the maximum speed at which a test driver can navigate a course involving a series of sharp turns. On the other hand, closed-loop tests are sometimes criticized because the drivers have too great an influence on the outcome.

An advantage of open-loop testing is that the outcome of the test is not driver-dependent. An example of an open-loop test is the fishhook test now under development by NHTSA (*Federal Register* 2001). In fishhook tests, vehicles under computer control execute a precisely controlled steering input

[6] During its visits to the Ford, General Motors, and DaimlerChrysler facilities (see Appendix B), the committee established that each company uses an extensive suite of static and dynamic tests in developing its vehicles, but that different companies use different tests.

one way, followed, at a time signaled by the on-board computer, by a precisely controlled steering input the other way. Such tests are sometimes criticized on the grounds that the maneuvers are not similar to those made by drivers on the road (*Federal Register* 2001).

From the perspective of the controls input to the vehicle, it is clear that open-loop testing is more repeatable than closed-loop testing and, in that sense, more objective. Debate remains, however, as to whether open-loop tests provide information that pertains to real-world driving experiences. The committee regards this as an area in which legitimate differences of opinion can exist. Should NHTSA rely on open-loop testing, it will be incumbent on the agency to provide the rationale linking the open-loop scenarios selected to actual driver experiences.

Summary

In summary, SSF is a scientifically based static measure that provides information on a vehicle's rollover propensity in out-of-control situations. Dynamic testing provides information on a vehicle's crash-avoidance characteristics; it discriminates among vehicles with a similar SSF but a different likelihood of getting into out-of-control situations. Both static measures and dynamic testing are needed to investigate a rollover crash in its entirety, from initiation to final outcome. A suitable dynamic test protocol should, at a minimum, make it possible to segregate driver or vehicle systems that are susceptible to loss of control from those that are more robust.

FINDINGS AND RECOMMENDATION

Findings

2-1. Through a rigid-body model, SSF relates a vehicle's track width, T, and center of gravity height, H, to a clearly defined level of the sustained lateral acceleration that will result in the vehicle's rolling over. The rigid-body model is based on the laws of physics and captures important vehicle characteristics related to rollover.

2-2. SSF is preferable to other static measures as an indicator of a vehicle's rollover propensity.

2-3. Dynamic testing is needed to understand the loss-of-control phase of a crash in which driver actions, vehicle design, and such features as stability control are important. The development of one or more appropriate dynamic tests will require complex choices and extensive evaluation of test options.

2-4. Dynamic testing is required to assess the performance of electronic stability control systems and their potential for reducing the likelihood of a loss of control before rollover.

Recommendation

2-1. NHTSA should vigorously pursue the development of dynamic testing to supplement the information provided by SSF.

REFERENCES

Bernard, J.E., J. Shannan, and M. Vanderploeg. 1989. *Vehicle Rollover on Smooth Surfaces*. SAE 891991, Society of Automotive Engineers.

Chrstos, J.P., and G.J. Heydinger. 1997. *Evaluation of VDANL and VDM RoAD for Predicting the Vehicle Dynamics of a 1994 Ford Taurus*. SAE 970556, Society of Automotive Engineers.

Federal Register. 2000. Consumer Information Regulations; Federal Motor Vehicle Safety Standards; Rollover Prevention; Request for Comments. Vol. 65, No. 106, June 1, pp. 34,998–35,024.

Federal Register. 2001. Consumer Information Regulations; Federal Motor Vehicle Safety Standards; Rollover Resistance; Request for Comments. Vol. 66, No. 128, July 3, pp. 35,179–35,193.

Gillespie. 1992. *Fundamentals of Vehicle Dynamics*. Society of Automotive Engineers.

Jones, I.S. 1973. *Road Accident Studies with Particular Reference to the Handling and Stability Characteristics of Cars*. Ph.D. thesis. University of London.

Lund, Y.I., and J.E. Bernard. 1995a. Highway Vehicle Simulation. In *SVM-13 Shock and Vibration Computer Programs* (Pilkey and Pilkey, eds.), Shock and Vibration Analysis Center (SVAC), Falls Church, Va.

Lund, Y.I., and J.E. Bernard. 1995b. *Analysis of Simple Rollover Metrics*. SAE 950306, Society of Automotive Engineers.

Meriam, J.L. 1959. *Mechanic, Part II: Dynamics*. 2nd ed. John Wiley and Sons, Inc., New York, pp. 298–299.

3
Statistics and Data Analysis

The National Highway Traffic Safety Administration's (NHTSA's) final rule regarding consumer information on rollover resistance (*Federal Register* 2001) notes that "the effect of SSF [static stability factor] must be shown to have a significant influence on the outcome of actual crashes (rollover vs. no rollover) to be worth using for consumer information." To this end, the agency undertook a statistical study to investigate the relationship between measured values of SSF for a range of vehicles and corresponding rollover rates determined from real-world crash data (*Federal Register* 2000). The agency subsequently conducted further statistical analyses in response to public comment on the first study (*Federal Register* 2001).

As noted in Chapter 1, rollover crashes are complex events influenced by driver characteristics, the driving environment, and the vehicle and the interaction among the three. Therefore, one of the challenges in analyzing rollover crash data is to isolate the effect of a particular variable—such as SSF—from that of other variables. Differences in rollover risk[1] due to how, when, where, and by whom a vehicle is operated complicate comparisons of the rollover risk of different vehicles. NHTSA's analyses of crash data involved the use of binary-response models. A binary-response model is a regression model in which the dependent variable (outcome of the crash) is binary ("rollover" or "no rollover"). NHTSA used such models to study the effect of various explanatory variables—such as driver characteristics, environmental conditions, and vehicle metrics—on the probability of rollover.

According to NHTSA, the results of its statistical analyses reveal that, in the event of a single-vehicle crash, the effect[2] of SSF on the probability of rollover is highly important, even when driver characteristics—such as age—and environmental characteristics—such as road and weather conditions—contribute to the crash. This statistical correlation between SSF and the probability of rollover is the foundation for NHTSA's star rating system for rollover resistance and for the one- to five-star ratings assigned to different vehicles.

[1] For consistency with NHTSA's analyses, rollover risk is defined as the probability of rollover in the event of a single-vehicle crash. In the present context, rollover risk does not predict the likelihood of a single-vehicle crash or the type or severity of injuries expected.

[2] The analyses described in this chapter demonstrate that there is a causal relationship between SSF and the probability of rollover, but it is difficult to isolate the causal effect from confounded effects using data on past crashes. Confounding occurs if variables that are correlated with both SSF and the probability of rollover are omitted.

This chapter presents the committee's review of the statistical analyses that form the basis for NHTSA's rollover resistance rating system. The results of additional statistical analyses performed by the agency at the committee's request are also discussed. The purpose of all these analyses was to investigate what crash data indicate about the effect of SSF on a vehicle's propensity to roll over. The chapter begins with a review of the available sources of crash data and a description of the data selected by NHTSA for use in its analyses. Some basic statistical ideas and the notation used in the chapter are then presented. The next section describes the binary-response models used by NHTSA in constructing a rating system. The influence of the driver and driving environment on the probability of rollover is then examined in depth, and a preliminary estimate of a nonparametric version of the binary-response model for rollovers is presented. Next, the potential—from a statistical perspective—of the binary-response models used by NHTSA to provide practical, useful information to the public is examined. The chapter concludes with a summary of the committee's findings and recommendations in the area of statistics and data analysis.

ROLLOVER CRASH DATA

This section begins with a brief overview of the major sources of data available to NHTSA for the purposes of its statistical analysis of rollover crashes. The rationale behind the agency's choice of crash data is then reviewed, with particular emphasis on the selection of data from six states for use in constructing the rollover resistance rating system.

Crash Data Files

Four major databases maintained by NHTSA have the potential to support evaluation of rollover collisions, including rollover rates:

- State Data System (SDS);
- Fatality Analysis Reporting System (FARS);
- General Estimates System (GES); and
- Crashworthiness Data System (CDS).

Table 3-1 summarizes the key features of these databases. All four include some information on rollover crashes. As indicated in the table, however, there are variations in the numbers of rollovers reported and in the level of detail provided about each crash (e.g., extent of injuries or information on crash site).

TABLE 3-1 Features of NHTSA's Major Crash Databases

Database	Key Features	Data on Rollover Crashes
State Data System (SDS)	• Contains police-reported crash data collected in 17 states • Crash files developed and maintained by responsible agency in each state	• Large amount of rollover crash data available • Need to be aware of state-to-state differences in road characteristics, driver use patterns, and reporting practices
Fatality Analysis Reporting System (FARS)	• Data for all fatal crashes in the country occurring on public roads • Data obtained from police crash reports, driver licensing files, vehicle registration files, hospital records, and other sources • Used to generate NHTSA's annual publication *Traffic Safety Facts*	• Moderate number of rollover crashes • Restriction to fatal crashes limits use for examining propensity of vehicles to roll over under the full range of possible collision types
General Estimates System (GES)	• Part of National Automotive Sampling System (NASS); became operational in 1988 • Approximately 50,000 crashes included annually • Data acquired from sample of police-reported crashes in 400 jurisdictions within 60 areas across the United States • Can be used to produce national estimates of crash-related safety problems at all levels of injury severity, from property-damage–only to fatal	• System relies on sampling, so number of rollover crashes is relatively small compared with datasets within SDS database • Estimates of rollover rates, injury severity, and other characteristics associated with rollover crashes should provide reasonable national estimates of the problem, provided the sampling is not biased
Crash-worthiness Data System (CDS)	• Part of NASS • Includes detailed postcrash data collected by trained investigators • 4,000–5,000 crashes included annually, selected randomly from a sample of national jurisdictions; includes all levels of injury severity • Data acquisition includes detailed review of crash site, examination of vehicle(s) involved, review of medical records of injured, and interviews with crash victims • Expensive to develop	• Contains most-detailed crash data available in any national file, including an entire subset of variables associated with rollover • Does not contain sufficient numbers of rollover crashes to be useful for modeling analysis • Used by NHTSA to assess relative frequencies of "investigator defined" tripped and untripped rollovers

Rationale Behind NHTSA's Selection of Data

The crash data used by NHTSA to develop statistical models are derived from police crash reports and form part of the SDS. The decision to use data from specific states within the SDS was driven largely by the desire to have a robust data set for the analysis. The GES and CDS were judged inappropriate because the numbers of rollover crashes reported in these databases are relatively small. And although the FARS database includes a moderate number of rollovers, the restriction to fatal crashes limits the range of crash scenarios represented in which a vehicle may overturn.

Although the police-reported data in the SDS are the most important in understanding NHTSA's modeling efforts, the three other databases man-

aged by NHTSA and listed in Table 3-1 are often referenced in reports and documents addressing the rollover crash problem.

All three of these databases were considered by NHTSA in the process of identifying appropriate data for statistical modeling. Thus although the FARS, GES, and CDS databases were deemed inadequate, they were useful in informing NHTSA's analyses.

Importance of Single-Vehicle Crashes

NHTSA's analyses used SDS crash data relating to single-vehicle events only (see below). Indeed, although FARS and GES data were not used to derive the statistical correlation between rollover rates and SSF, these data highlight the preponderance of rollover-related deaths and injuries associated with single-vehicle crashes. For example:

- Analysis of 1999 FARS data shows that 82 percent of light-vehicle rollover fatalities were associated with single-vehicle crashes.
- According to 1999 FARS data, rollover accounted for 55 percent of all occupant fatalities for single-vehicle crashes involving light vehicles.
- GES data for the period 1995–1999 indicate that, on average, 241,000 light vehicles rolled over each year nationwide. Of this total, 205,000 (85 percent) were single-vehicle events that resulted in 46,000 severe (incapacitating) or fatal injuries.

Tripped Versus Untripped Rollover

The CDS database—part of the National Automotive Sampling System (NASS)—identifies many different categories of rollover, including "trip-over" (also known as tripped rollover) and "turn-over" (also known as untripped rollover).[3] The different rollover types coded in the CDS database are determined primarily from crash scene and vehicle inspections, with additional evidence derived from photographs, police reports, and interviews with drivers and others.[4] It is widely acknowledged that the interpretation of crash scene evidence can be problematic, with resulting uncertainties in distinguishing between tripped and untripped rollovers. In 1998, the coding of a number of crashes in the CDS database for the period 1992–1996 was revisited, and revisions were made. In particular, many of crashes originally coded as untripped were recoded as tripped (NHTSA 1999). NHTSA has sought to demonstrate that the vast majority of single-vehicle passenger-vehicle rollovers

[3] See Chapter 2 for definitions of tripped and untripped rollover.

[4] "Collection of NASS CDS Data Relating to Rollover," presentation to the Committee for the Study of a Motor Vehicle Rollover Rating System by Robert Woodill (Veridian Engineering) and John Brophy (NHTSA), Washington, D.C., May 29, 2001.

are tripped. According to the agency's analysis of CDS data for the period 1992 through 1996, more than 95 percent of single-vehicle crashes involving rollover were tripped (NHTSA 1999; *Federal Register* 2001).

As noted in Chapter 2, it is the magnitude and duration of the forces on a vehicle—rather than the tripping mechanism—that determine whether rollover occurs. In light of this observation, as well as the practical difficulties involved in distinguishing the two categories of rollover, tripped and untripped rollovers are not addressed separately in the present discussion. Moreover, the SDS data used by NHTSA in developing its rollover probability model and subsequent rating system do not distinguish between the two types of rollovers, and crash data for both types were included in the agency's statistical analyses.

State Selection

NHTSA's analyses were based on SDS data for specific states, selected on the basis of the following criteria (*Federal Register* 2000):

- The state had to participate in the SDS and must have provided data for 1997.[5]
- The vehicle identification number (VIN) had to be included in the electronic file.
- The file had to include a variable indicating whether a rollover occurred as either the first or a subsequent event in the crash.

NHTSA selected six states for modeling: Florida, Maryland, Missouri, North Carolina, Pennsylvania, and Utah. The corresponding single-vehicle crash data were used in the modeling analysis that resulted in the curve used to establish the star rating values for individual vehicle models. Data from New Mexico and Ohio were also used for some of the supporting analyses, but were not included in the modeling efforts because of differences in crash reporting practices.

Single-vehicle crashes served as the exposure measure for assessing the relative magnitude of the rollover problem (i.e., number of rollover events or number of single-vehicle crashes). The crashes included in the analysis were single-vehicle collisions for all light vehicles (less than 10,000 pounds gross vehicle weight) between 1994 and 1998 (see Table 3-2). Such crashes were defined as not involving another motor vehicle, pedestrian, bicyclist, animal, or train. Special classes of vehicles were also excluded from the analysis, notably emergency vehicles (e.g., fire, ambulance, police, or military), parked vehicles, and vehicles pulling a trailer. The total number of single-vehicle crashes initially included in the dataset was 227,194.

[5] The second analysis conducted by NHTSA in response to public comment also included 1998 data.

TABLE 3-2 Single-Vehicle Crash Frequencies for Six States Included in Modeling Analysis

	Calendar Year of Data					
State	**1994**	**1995**	**1996**	**1997**	**1998**	**Total**
Florida	6,174	8,295	9,552	10,766	10,832	45,619
Maryland	3,795	4,296	5,079	4,957	4,974	23,101
Missouri	6,001	7,464	8,988	8,957	9,620	41,030
North Carolina	8,555	10,674	12,880	13,609	12,866	58,584
Pennsylvania	9,303	11,143	13,530	14,885	[a]	48,861
Utah	1,499	1,731	1,955	2,338	2,476	9,999
Total	35,327	4,3603	51,984	55,512	40,768	227,194

[a]1998 data for Pennsylvania were not used because they did not contain curve and grade variables.
SOURCE: *Federal Register* 2001.

NHTSA identified 100 different vehicle make and model combinations, each with a unique SSF (see *Federal Register* 2001, Appendix I). All the 227,194 single-vehicle crashes in the dataset involved vehicles with VINs that matched one of the 100 groups. However, any of the 100 make and model groups for which there were fewer than 25 crashes were excluded from the analysis. The final dataset used for analysis comprised 226,117 crashes in 87 make and model groups. Of these crashes, 45,574 (20.16 percent) resulted in rollover.

In light of NHTSA's responsibilities for establishing national policy and providing information relevant at the national level, it is important that the rollover crash data used to derive consumer information be representative of all states. Hence, the agency undertook an additional effort that involved using the GES database to determine whether the rollover rate for a national sample of single-vehicle crashes was similar to the rate for the six states included in the original analysis. Using GES data for 1994 through 1998 (the same years as the SDS data), a total of 9,910 vehicles were identified that (1) had VINs that placed them in the group of 100 make/model categories, and (2) were involved in single-vehicle crashes. Of these vehicles, 2,377 rolled over. After applying the appropriate weighting factors to account for the GES sampling scheme, NHTSA obtained national estimates for single-vehicle crashes and subsequent rollover crashes of 1,185,474 and 236,335, respectively. The resulting rollover rate was 19.94 percent—essentially the same as the rate of 20.16 percent derived for the six states used in the modeling analysis.

BACKGROUND AND NOTATION

This section reviews some basic statistical ideas relevant to the present discussion, together with the notation used in statistical analyses of rollover crash data. As stated earlier, NHTSA's rollover resistance rating system is

based on a binary-response model of rollover events. The dependent variable and explanatory variables of the model are first described, and the specification of the relation between the dependent variable and explanatory variables is then discussed. Finally, the concept of the rollover curve—the basis for NHTSA's rating system—is introduced, and two interpretations of this curve are presented.

Dependent and Explanatory Variables

The binary-response model for rollovers states that the probability of rollover, given that a single-vehicle crash has occurred, is a certain function of selected explanatory variables. Let Y denote the dependent variable in a binary-response model of rollovers. This variable Y is equal to 1 if there is a rollover and 0 otherwise. Thus, the probability of a rollover is the probability that $Y = 1$. This probability depends on the values of the explanatory variables incorporated in the model.

The commonly used explanatory variables include driver characteristics, environmental variables, and vehicle metrics. An example of a driver variable is YOUNG (Z_1), where $Z_1 = 1$ if the driver is under 25 years old and 0 otherwise. An example of a road condition variable is CURVE (Z_2), where $Z_2 = 1$ if the crash occurred on a curve area and 0 otherwise. An example of a vehicle metric is SSF, which is denoted by X.

The explanatory variables are typically divided into two groups: the vehicle metrics are in one group and the driver characteristics and environmental variables in the other. This latter group defines what is called a scenario. Let Z denote the array of driver and environmental variables. To simplify the exposition, suppose a scenario is defined by one driver variable and one environmental variable, unless noted otherwise. In this case, Z has only two components: $Z = (Z_1, Z_2)$. If a scenario is defined by the variables YOUNG and CURVE, there are four possible scenarios: (0,0), (0, 1), (1,0), (1,1). For example, the scenario (1,1) describes the case of a single-vehicle accident involving a young driver on a curve.

SSF is the only vehicle metric used by NHTSA for the purpose of constructing a rating system. However, because driver and environmental variables also may be important in determining rollover risk, variables in these other categories were considered as well. These variables are explained in Table 3-3. The criterion for the selection of the driver and environmental variables was the availability of appropriate data both within the GES and for the six SDS states used in NHTSA's analysis. The variables ultimately considered in the models were DARK, STORM, FAST, HILL, CURVE, BADSURF, MALE, YOUNG, OLD, and DRINK (see Table 3-3).

NHTSA also included the six SDS states as explanatory variables. An example of a state variable is S_1, say, where $S_1 = 1$ if Florida is the state in which the single-vehicle crash occurred and 0 otherwise. The need for these state-

TABLE 3-3 Variables Available for Inclusion in NHTSA's SSF-Rollover Rate Model

Variable	Definition
ROLL[a]	Proportion of single-vehicle crashes that involved a rollover
SSF[a]	Numeric value of static stability factor
DARK[a]	Proportion of single-vehicle crashes that occurred during darkness
STORM[b]	Proportion of single-vehicle crashes that occurred during inclement weather
RURAL	Proportion of single-vehicle crashes that occurred in rural areas
FAST[b]	Proportion of single-vehicle crashes that occurred on roadways where the speed limit was 50 mph or greater
HILL[b]	Proportion of single-vehicle crashes that occurred on a grade, at a summit, or at a dip
CURVE[b]	Proportion of single-vehicle crashes that occurred on a curve
BADROAD	Proportion of single-vehicle crashes that occurred on roads with potholes or other bad road conditions
BADSURF[a]	Proportion of single-vehicle crashes that occurred on wet, icy, or other bad surface conditions
MALE[b]	Proportion of single-vehicle crashes involving a male driver
YOUNG[b]	Proportion of single-vehicle crashes involving a driver under 25 years old
OLD[b]	Proportion of single-vehicle crashes involving a driver age 70 or older
NOINSURE	Proportion of single-vehicle crashes involving an uninsured driver
DRINK[b]	Proportion of single-vehicle crashes involving a driver who was drinking or using illegal drugs
NUMOCC	Average number of vehicle occupants

[a] Variable included in models.
[b] Environmental or driver variable found statistically significant in models.

SOURCES: *Federal Register* 2000, 2001 (Table 7).

based variables is explained by the known differences among states in crash reporting practices (see *Federal Register* 2001, Table 5), roadway characteristics, driver demographics and vehicle usage patterns, and other such factors.

As discussed in Chapter 2, physics indicates that SSF is an indicator of a vehicle's rollover propensity. The purpose of the statistical analysis is to investigate what the crash data indicate about the effect of SSF on a vehicle's propensity to roll over and whether the magnitude of this effect depends on driver and environmental variables. The example of a double-decker bus illustrates the complexities involved in interpreting the results of such crash data analyses. The double-decker bus has a low SSF. This fact does not automatically imply that accident data for the double-decker bus will show that SSF is strongly correlated with the incidence of rollover, because the accident history depends on the bus driver and the driving conditions as well as on SSF. If a double-decker bus is normally driven by a professional driver in an urban area, the number of accidents is likely to be low, and in the accidents that do occur, there are likely to be relatively few rollovers. This example illustrates that the scenario can attenuate the observed effect of SSF. At the same time, however, the accident history in this example does not negate the fundamental physics of rollover. Thus SSF remains important in determining a vehicle's

rollover propensity, as discussed in Chapter 2, although its influence is not clearly manifested in the crash data because the double-decker bus is rarely involved in higher-risk scenarios, and these vehicles experience relatively few rollovers.

Functional Forms

The statistical problem is to estimate the probability that $Y = 1$ (i.e., the probability of a rollover), considered as a function of the explanatory variables. For this purpose, the conventional approach is to specify what is called a parametric binary-response model. In this approach, the form of the relation between the probability that $Y = 1$ and the explanatory variables is assumed known, while the values of certain parameters in the relationship are to be determined. Linear regression analysis is a well-known example of this approach. In linear regression analysis, the relation between the dependent and explanatory variables is assumed to be linear, but the values of the coefficients in the linear relation are assumed to be unknown. In the case of a binary-response model, the relation between the probability that $Y = 1$ and the explanatory variables is generally assumed to be nonlinear.

Following the parametric approach, suppose that the true probability that $Y = 1$ given that $Z = z$ and $X = x$ is

$$P(Y = 1 \mid Z = z, X = x) = F(\alpha_0 + \alpha_1 z_1 + \alpha_2 z_2 + \beta x) \tag{1}$$

where the function F specifies the relation between the probability that $Y = 1$ and the explanatory variables. The assumption is that the functional form F is known and that the values of the parameters α_0, α_1, α_2, and β are unknown. The typical assumption is that F is a cumulative distribution function. The commonly used distribution functions are smooth S-shaped curves.

The most widely used binary-response models are logit and probit models. A binary-response model is referred to as a logit model if F is the cumulative logistic distribution function and as a probit model if F is the cumulative normal distribution function. NHTSA employed a logit model in its statistical analysis of rollover crash data. Generally, both types of models produce highly similar statistical results because the logistic and normal distributions are both symmetrical around zero and have very similar shapes, except that the logistic distribution has fatter tails.

The problem is to estimate the unknown parameters. The parameters of logit and probit models are typically estimated by maximum likelihood, and this is the estimation method used by NHTSA for its logit model. The maximum-likelihood estimator has good properties in large samples.[6] In par-

[6] One criterion for judging whether a sample is large is to determine whether large sample approximations work. Such approximations are assumed to work for the sample sizes used in the present analyses.

ticular, it is asymptotically efficient; that is, it is the precise estimator in large samples.

Rollover Curve and Interpretations

The rating system proposed by NHTSA is based on SSF. Suppose that the (true) probability that $Y = 1$ given that $X = x$ is

$$P(Y = 1 \mid X = x) = G(\beta_0 + \beta_1 x) \tag{2}$$

where the functional form G is known, and the parameters β_0 and β_1 are unknown. This model gives the relation between the probability that $Y = 1$ and X. This relation is called the *rollover curve*. The physics of rollover strongly suggests that the rollover curve is downward sloping; that is, the probability that $Y = 1$ decreases as SSF increases.

The rollover curve has two interpretations, depending on how the model $G(\beta_0 + \beta_1 x)$ is derived. In one interpretation, the rollover curve gives the average of the rollover probability for each value of SSF, where the average is taken over the scenarios. In this case, the rollover curve can be estimated using data on only one explanatory variable, namely SSF. In the other interpretation, the rollover curve gives the rollover probability for the average scenario. In this case, data on driver and environmental variables, as well as SSF, are used in estimating the curve. Either approach can be used to estimate the rollover curve, although the two approaches yield different results (see Box 3-1). NHTSA has employed the second approach extensively in estimating the rollover curve. This is a reasonable choice provided the average scenario is an empirically relevant baseline for comparing vehicles.

STATISTICAL MODELS

NHTSA's initial analysis of single-vehicle crash data was based on an exponential model—a type of model that is little used in the statistical literature. The current rating system for rollover resistance was constructed using an estimated rollover curve also based on an exponential model. The uncertainties associated with this estimated rollover curve were not considered in deriving the star rating categories. Subsequently, NHTSA conducted further analyses using a logit model, which, as noted earlier, is a widely used type of binary-response model. The results obtained using the logit model are presented below.

Following a brief discussion of issues related to uncertainty in estimating statistical models, this section describes exponential and logit parametric binary-response models. The rollover curves and associated confidence intervals obtained by NHTSA in its analyses are then considered.

BOX 3-1

Two Interpretations of the Rollover Curve

Taking the average of the rollover probability for each value of SSF, where the average is taken over the scenarios, the average rollover probability is

$$P(Y = 1 \mid X = x) = \sum_z [P(Y = 1 \mid Z = z, X = x)\ P(Z = z \mid X = x)]$$

In contrast, the rollover probability for the average scenario is

$$P^*(Y = 1 \mid X = x) = P(Y = 1 \mid Z = \bar{z}, X = x)$$

where $\bar{z} = (\bar{z}_1, \bar{z}_2)$ is the array of the sample means of the scenario variables. The two formulas for the rollover curve do not produce the same result:

$$P(Y = 1 \mid X = x) \neq P^*(Y = 1 \mid X = x)$$

The first formula can be written as

$$P(Y = 1 \mid X = x) = \sum_z F(\alpha_0 + \alpha_1 z_1 + \alpha_2 z_2 + \beta x)\ P[Z = (z_1, z_2) \mid X = x]$$

which says that $P(Y = 1 \mid X = x)$ is a weighted average of functions. The weighted average $P(Y = 1 \mid X = x) = G(\beta_0 + \beta_1 x)$ can be estimated using data on only one explanatory variable, namely SSF. The second formula can be expressed as

$$P^*(Y = 1 \mid X = x) = F(\alpha_0 + \alpha_1 \bar{z}_1 + \alpha_2 \bar{z}_2 + \beta x)$$

which says that $P^*(Y = 1 \mid X = x)$ is a function of the average scenario. In this case, $F(\alpha_0 + \alpha_1 z_1 + \alpha_2 z_2 + \beta x)$ has to be estimated to estimate $P^*(Y = 1 \mid X = x)$; that is, the data on driver and environmental variables are also used in the estimation. The reason $P(Y = 1 \mid X = x) \neq P^*(Y = 1 \mid X = x)$ is that the average of the function is not the function of the average when the function is nonlinear. NHTSA has employed the second formula extensively in estimating the rollover curve.

Confidence Intervals

In reporting the results of estimation, it is good statistical practice to include some information on the reliability of the estimator—that is, the extent to which the estimate varies from sample to sample. The confidence interval for a parameter is a well-known statistical tool for evaluating the reliability of an estimator of a parameter. The parameters of interest here are the rollover probabilities in single-vehicle crashes. The width of the confidence interval associated with an estimated rollover probability reflects the uncertainty about the true value of the probability; a longer confidence interval indicates greater uncertainty. The larger the sample of crash data used in the estimation, the narrower is the width of the confidence interval for the true rollover probability, all other things being equal. Hence, a more reliable estimate of the model—and of the rollover curve—is expected from a large than from a small sample.

In the present case, NHTSA's dataset comprising more than 226,000 single-vehicle crashes constitutes a large sample, suggesting that the confidence intervals for the rollover probabilities derived are very narrow. This suggestion is confirmed when the data are analyzed using a logit model. Specifically, statistically reliable estimates of the rollover probabilities are obtained when the logit model is estimated by maximum likelihood from the ungrouped binary data. Consequently, statistical uncertainty about the rollover curve is not an issue when the logit model is used. However, NHTSA initially estimated a version of the exponential model using grouped data (make and model data). The associated confidence intervals were computed using formulas appropriate for the standard normal linear model and are relatively wide. The rollover probabilities can be estimated reliably provided the appropriate statistical methodology is used. The following discussion provides further insights into the issue of model choice.

Exponential Model

The exponential model is as follows:

$$P(Y = 1 \mid Z = z, X = x) = e^{(\alpha_0 + \alpha_1 z_1 + \alpha_2 z_2 + \beta x)} \tag{3}$$

Taking the logarithm of both sides, this model can be written as

$$\log(P) = \alpha_0 + \alpha_1 z_1 + \alpha_2 z_2 + \beta x \tag{4}$$

NHTSA refers to this model as a *linear* model. In principle, Formulation 3 can be estimated directly from binary data. In contrast, Linear Model 4 is estimated from grouped data. The exponential model, in either its original formulation or its logarithmic version, is seldom used for analyzing binary data.

NHTSA estimated a version of the linear model using grouped data. Using these data, the unknown probability P is replaced by a sample proportion, p. This replacement yields the model

$$\log(p) = \alpha_0 + \alpha_1 z_1 + \alpha_2 z_2 + \beta x + \epsilon \tag{5}$$

where ϵ is an error term that is approximately normally distributed. The model based on grouped data can be estimated by ordinary least squares. A better (more efficient) estimation method is to use weighted least squares because the variance of the sample proportion is not the same for all values of SSF.

NHSTA estimated a linear model that included SSF and the six state dummy variables as explanatory variables. The grouped data used to estimate the linear model were obtained as follows. The crash data were grouped into 100 make and model groups. As noted earlier, only 87 groups were used in the analysis because groups with fewer than 25 crashes were excluded (*Federal Register* 2001). All vehicles in a make or model group have the same SSF. The make and model groups were then sorted by state, producing 542 state and model groups. Again some groups were excluded because of the small number of crashes involved. NHTSA's estimation was based on 518 state make and model groups, that is, a sample of 518 observations. The proportion of rollovers was computed for each state make and model group.

At the request of the Alliance of Automobile Manufacturers, Exponent Failure Analysis Associates reviewed NHTSA's statistical analyses of crash data that serve as the basis for the star rating system for rollover resistance. As part of this review, Exponent (Donelson and Ray 2001) calculated confidence intervals for the rollover probabilities using formulas that are appropriate in the case of the standard linear normal regression model. NHTSA redid these calculations and obtained essentially the same results as Exponent. Figure 3-1 shows the estimated rollover curve and the 95 percent confidence intervals obtained by NHTSA.

The confidence intervals in Figure 3-1 are wide when SSF is low and become progressively narrower as SSF increases in value. Thus, for a sport utility vehicle (SUV) with an SSF of 1.1, the rollover probability in the event of a single-vehicle crash is approximately 0.26–0.42; this vehicle would receive a rollover resistance rating of one to three stars. In contrast, a passenger car with an SSF of 1.4 has a rollover probability of approximately 0.10–0.17 and would be assigned a four-star rating. What this analysis appears to show is that the uncertainty associated with the estimates is too large to permit accurate discrimination among SUVs. If this analysis is correct, a rating system based on a linear model does not provide information that can be used to distinguish among the rollover propensities of different SUVs.

NHTSA also calculated the confidence intervals using data that had been adjusted for national average road use and for differences in reporting practices. The resulting intervals are narrower because the adjustments smooth

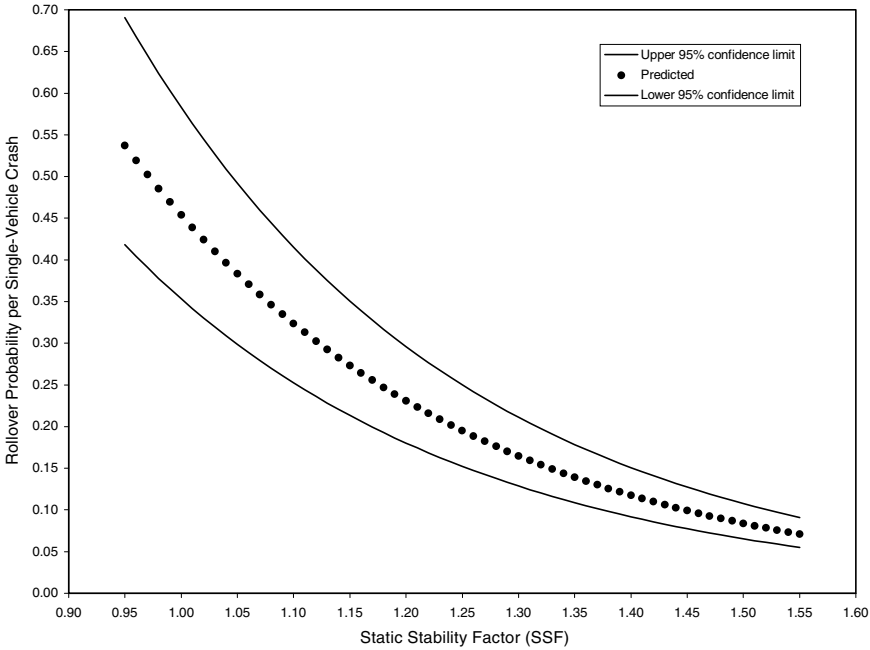

FIGURE 3-1 Estimate of probability of rollover and 95 percent confidence intervals for exponential model.

the grouped data; that is, they reduce the scatter of the sample proportions about the estimated rollover curve.

The confidence intervals reported in Figure 3-1 are based on a flawed statistical analysis. The flaw is that the confidence intervals calculated by Exponent and NHTSA depend only on the number of make and model groups, ignoring the states. For purposes of illustration, assume there are 100 make and model groups. If the number of crashes in the crash dataset is doubled, there are still 100 make and model groups. Thus, the confidence intervals do not shrink as expected with an increase in the number of crashes in the dataset. Hence, an increase in the size of the crash dataset does not improve the accuracy of the estimates according to the formulas employed by Exponent and NHTSA. This result indicates that something is wrong with the method used to calculate the confidence intervals shown in Figure 3-1.

Technically speaking, the widths of the confidence intervals depend on the estimated variances and covariances of the estimates of the parameters of the linear model. In the formulas used by Exponent and NHTSA, the estimated variances and covariances depend only on the number of make and model groups, not on the number of crashes in the dataset.

The make and model data have engendered confusion about the role of the rollover curve. If the objective is to estimate the true probability of rollover

for a given make or model group, then the best estimate of the rollover probability is obtained from the history of crashes for that group. In particular, the best estimate is the sample proportion of rollovers calculated from the crash data for that make or model. This is to say that the sample mean is the best estimate of the population mean. The implicit assumption is that a crash dataset is available for a given make or model—there is a history. Hence, if the objective is to estimate the make or model rollover probability for an old make or model group, there is no reason to estimate the rollover curve.

For new make and model groups there is no crash history, or a very limited one; that is, the crash dataset contains a small number of crashes, if any. The problem then arises of how to predict the rollover probability for these make and model groups. The rollover curve provides a solution, assuming that the relation between the rollover probability and SSF is the same for new as for old makes and models. What is known about the new make or model is its SSF. Given the SSF of the new make or model, the estimated rollover curve can be used to predict the rollover probability.

Logit Model

The logit model is as follows:

$$P(Y = 1 \mid Z = z, X = x) = 1/[1 + \exp(-\alpha_0 - \alpha_1 z_1 - \alpha_2 z_2 - \beta x)] \tag{6}$$

Taking the logarithm of both sides, this model can be written as

$$\log[P/(1 - P)] = \alpha_0 + \alpha_1 z_1 + \alpha_2 z_2 + \beta x \tag{7}$$

where $P/(1 - P)$ is called the *odds ratio*. The first formulation of Model 6 can be estimated from binary data by maximum likelihood. The software for maximum-likelihood estimation of Model 6 is widely available. The logarithmic version can be estimated by using grouped data.

A comparison of the logarithmic versions of the exponential and logit models shows that if the functional form of the logit model is correct, the functional form of the exponential model is misspecified. The logit and exponential functional forms cannot both be correct simultaneously.

There are two approaches for obtaining tight confidence intervals for the rollover probabilities. One is to estimate the exponential model by maximum likelihood using the ungrouped binary data. A more attractive approach is to switch to the logit model. As a practical matter, maximum-likelihood estimation of the logit model with ungrouped data can easily be implemented with available off-the-shelf statistical software. From a theoretical point of view, the logit model has more desirable properties than the exponential model. For example, an important property of the logit model is that it constrains true probabilities to lie between 0 and 1, and similarly for the prob-

abilities estimated by maximum likelihood. The same is not the case for the exponential model. The confidence intervals for the rollover curve based on the logit model are presented below.

The committee asked NHTSA to calculate the large-sample 95 percent confidence intervals for rollover probabilities based on maximum-likelihood estimation of the logit model using ungrouped binary data. The logit model included as explanatory variables SSF, driver and environmental variables, scenario dummy variables, and five state dummy variables (Missouri, the sixth state, was used as the baseline). The formula for the large-sample confidence interval is available in the statistical literature (see, for example, Greene 2000, p. 824). The estimated rollover curve and the 95 percent confidence intervals using the data for the six states combined are shown in Figure 3-2.[7] The maximum-likelihood estimates of the parameters of the logit model are reported in Appendix C.[8]

The first point to note is that an increase in SSF reduces the probability of rollover. The second point is that the widths of the confidence intervals

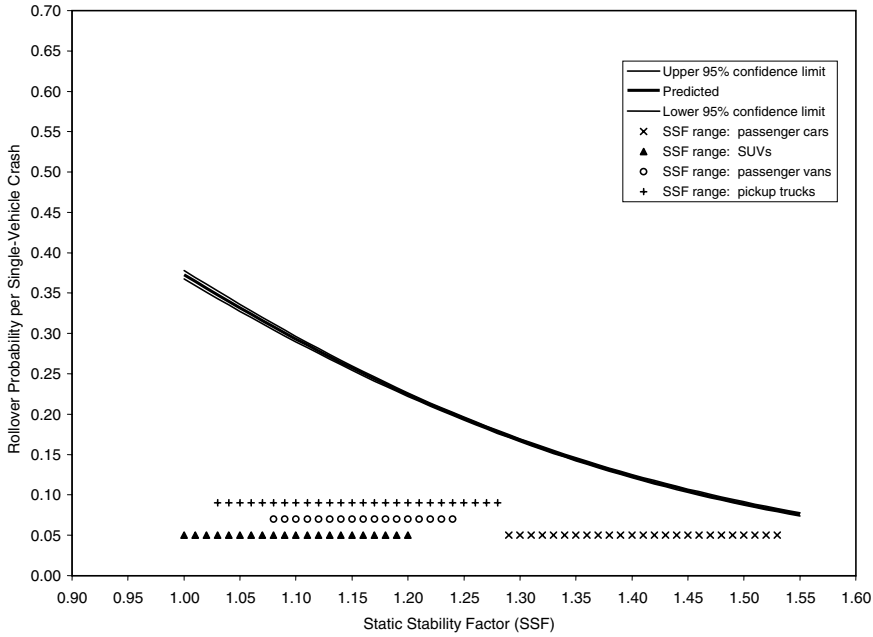

FIGURE 3-2 Estimated probability of rollover and 95 percent confidence intervals based on maximum-likelihood estimation of a logit model using data from six states combined (*n* = 206,822).

[7] The confidence intervals calculated by NHTSA were verified by independent review in selected cases.

[8] Because the logit model is nonlinear, the estimated parameters are not proportional to correlation coefficients.

are very narrow—about 0.01 or less for all values of SSF. These confidence intervals for the rollover probabilities are very narrow because the size of the crash dataset is very large; as discussed above, the widths of the confidence intervals shrink as the size of the crash dataset increases.

The confidence intervals displayed in Figure 3-2 suggest that, from a statistical perspective, it is possible to discriminate meaningfully among the reported rollover rates for vehicles within a single vehicle class using the logit model. The range of SSF for the four vehicle types used in the analysis is plotted in Figure 3-2 for comparison. These ranges are 1.00 to 1.20 for SUVs, 1.03 to 1.28 for pickup trucks, 1.08 to 1.24 for passenger vans, and 1.29 to 1.53 for passenger cars (*Federal Register* 2001, 3,412–3,415).

SCENARIO EFFECTS

In addition to SSF and the six states, NHTSA included driver and environmental variables as explanatory variables. As discussed earlier, the driver and environmental variables define a scenario. In this section, a scenario is defined by a unique combination of the following variables: STORM, FAST, HILL, CURVE, MALE, YOUNG, OLD, and DRINK (see Table 3-3 for definitions). Each of these variables takes on the value 1 or 0, that is, "yes" if it is present and "no" otherwise. Thus, a scenario designated "01001000" would indicate a crash that occurred on a roadway where the speed limit was 50 mph or greater (FAST) and that involved a male driver (MALE).

The rollover resistance rating system proposed by NHTSA using an exponential model is based on an "average" rollover curve for an "average" scenario. The average is a measure of the location of a distribution, but another important feature of a distribution is its variance or dispersion. The greater the variance or dispersion, the less informative is the average for decision making. Analysis of crash data indicates that, although an increase in SSF reduces the probability of rollover, the rollover curves are different for different scenarios. These variations suggest that potentially useful information about the occurrence of rollovers is not captured by the average rollover curve.

A plausible hypothesis—consistent with the double-decker bus example discussed earlier—is that the influence of SSF on rollover rates in real-world crashes is more apparent in higher-risk than in lower-risk scenarios. To investigate this hypothesis, the committee asked NHTSA to estimate rollover curves for specific scenarios using the data from all six states.

Six scenarios were selected to represent the range of driver and environmental conditions found in the database. The eight binary variables listed above define a theoretical total of 192 (or $2^6 \times 3$) unique scenarios. [The number of unique scenarios is fewer than the 256 (or 2^8) possible combinations of variables because YOUNG and OLD are mutually exclusive.] In fact, only 188 scenarios were encountered in the database for the six states combined. The scenarios can be ordered by the observed frequency of rollovers: when the fre-

quency is low, the scenarios are said to be low risk, and when the frequency is high, the scenarios are high risk. The following key percentiles were selected:

1. Low risk (close to minimum)—Scenario 00000010;
2. 25th percentile—Scenario 00001100;
3. Mean—Scenario 11000000;
4. Median—Scenario 01001000;
5. 75th percentile—Scenario 11101000; and
6. High risk (close to maximum)—Scenario 01011001.

For example, using these definitions, the high-risk scenario would be the combination of the NO STORM, FAST, NO HILL, CURVE, MALE, NOT YOUNG, NOT OLD, and DRINK variables.

The logit model was used to estimate the probability of a single-vehicle rollover crash as a function of SSF and state dummy variables for each of the six scenarios. The average scenario–average state logit model developed to estimate the probability of a single-vehicle rollover crash across all scenarios and states is shown in Figure 3-2.

The estimated rollover curves and their 95 percent confidence intervals for the six selected scenarios, averaged across states, are presented in Figures 3-3 through 3-8. The upper and lower 95 percent confidence limits for the probability of rollover were computed using the formula for asymptotic variance of the estimated probabilities given by Greene (2000, 824). The associated regression results are shown in Appendix C. Figures 3-3[9] through 3-8 reveal that the estimated rollover curves are indeed different for different scenarios. The curves tend to be flat for low-risk scenarios, more steeply (negatively) sloped for scenarios with about average risk, and still more steeply (negatively) sloped for high-risk scenarios.

Figures 3-3 through 3-8 illustrate that the observed effect on rollover rate of an increase in SSF depends on the scenario. For example, comparison of the rollover curves for low-risk and mean-risk scenarios (Figures 3-3 and 3-5, respectively) reveals some notable differences. For the low-risk scenario, an increase in SSF from 0.95 to 1.20 results in a decrease in rollover probability of about 0.07, whereas a corresponding increase in SSF for the mean-risk scenario results in a decrease in rollover probability of about 0.20. The estimated reduction in rollover probability for the low-risk scenario is subject to far greater uncertainty than that for the mean-risk scenario because the associated 95 percent confidence bands are far wider. Thus, Figures 3-3 through 3-8 show that assessment of the importance of SSF in real-world crashes depends on which scenario is considered.

[9] The rollover curve for the low-risk scenario shown in Figure 3-3 has wide confidence bands at low SSF. This is due, in part, to three effects: the standard errors of the estimated coefficients for the logit model are large (see Appendix C); the "center of gravity" of the curve is at a relatively high value of SSF; and all calculations are performed on the log scale and then transformed back to the original scale.

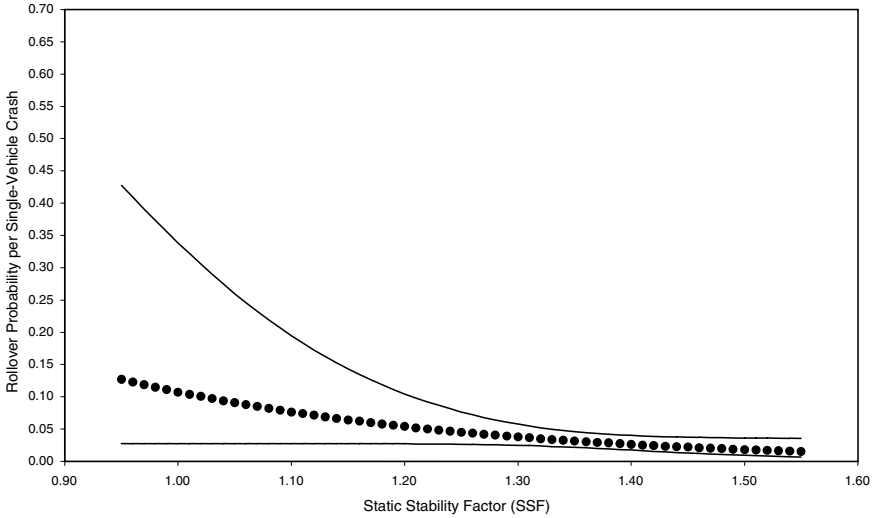

FIGURE 3-3 Estimated probability of rollover and 95 percent confidence intervals based on maximum-likelihood estimation of a logit model using data from six states for low-risk scenario. [NOTE: (STORM, FAST, HILL, CURVE, MALE, YOUNG, OLD, DRINK) = 00000010; 908 observations (0.4 percent of total) and 28 rollovers.]

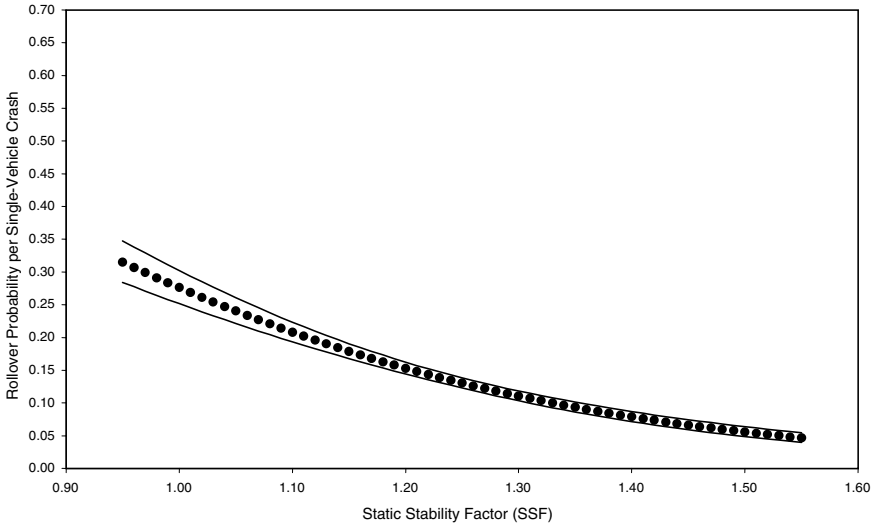

FIGURE 3-4 Estimated probability of rollover and 95 percent confidence intervals based on maximum-likelihood estimation of a logit model using data from six states for 25th-percentile–risk scenario. [NOTE: (STORM, FAST, HILL, CURVE, MALE, YOUNG, OLD, DRINK) = 00001100; 8,101 observations (3.9 percent of total) and 1,082 rollovers.]

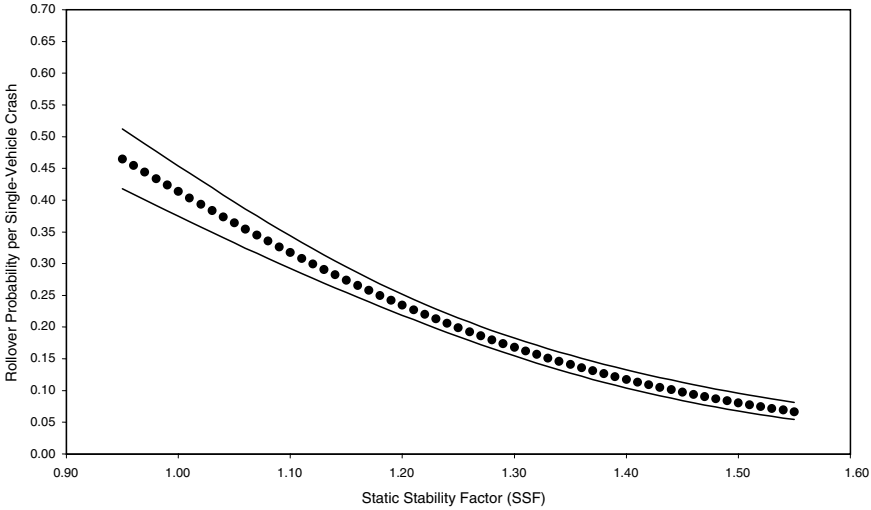

FIGURE 3-5 Estimated probability of rollover and 95 percent confidence intervals based on maximum-likelihood estimation of a logit model using data from six states for mean-risk scenario. [NOTE: (STORM, FAST, HILL, CURVE, MALE, YOUNG, OLD, DRINK) = 11000000; 3,346 observations (1.6 percent of total) and 694 rollovers.]

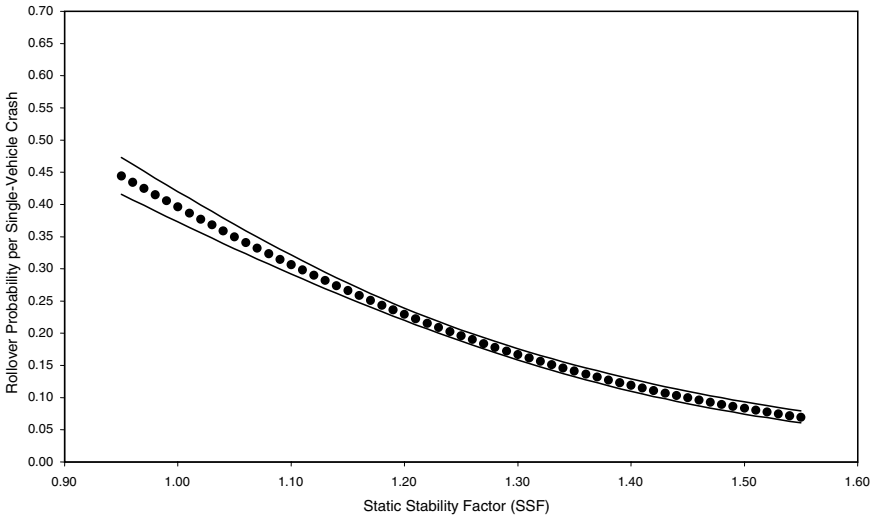

FIGURE 3-6 Estimated probability of rollover and 95 percent confidence intervals based on maximum-likelihood estimation of a logit model using data from six states for median-risk scenario. [NOTE: (STORM, FAST, HILL, CURVE, MALE, YOUNG, OLD, DRINK) = 01001000; 9,256 observations (4.5 percent of total) and 2,030 rollovers.]

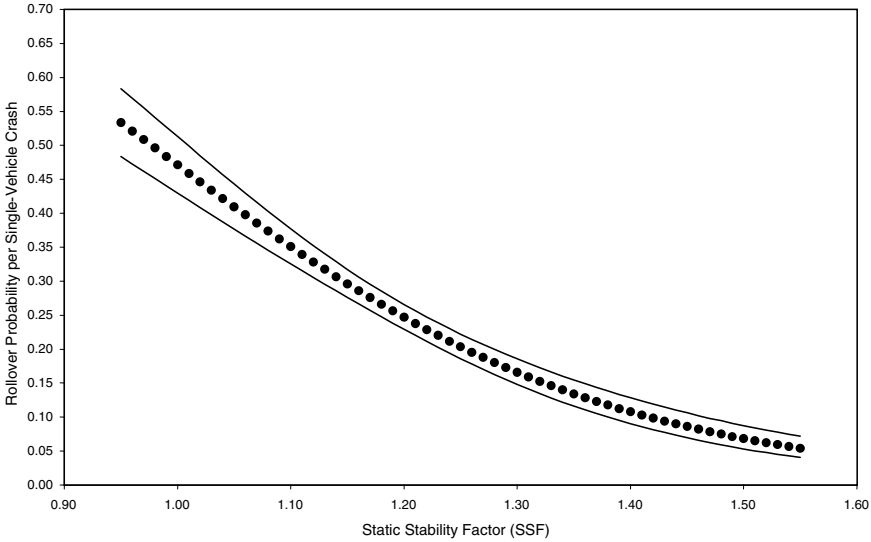

FIGURE 3-7 Estimated probability of rollover and 95 percent confidence intervals based on maximum-likelihood estimation of a logit model using data from six states for 75th-percentile–risk scenario. [NOTE: (STORM, FAST, HILL, CURVE, MALE, YOUNG, OLD, DRINK) = 11101000; 2,594 observations (1.3 percent of total) and 677 rollovers.]

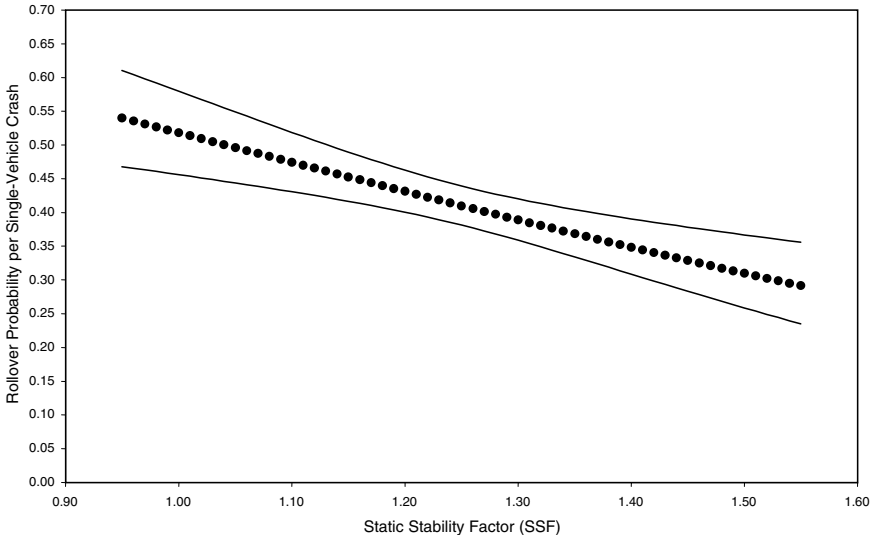

FIGURE 3-8 Estimated probability of rollover and 95 percent confidence intervals based on maximum-likelihood estimation of a logit model using data from six states for high-risk scenario. [NOTE: (STORM, FAST, HILL, CURVE, MALE, YOUNG, OLD, DRINK) = 01011001; 1,270 observations (0.6 percent of total) and 537 rollovers.]

NONPARAMETRIC MODEL

The confidence intervals calculated for the rollover curve using the logit model assume that the logit model is correctly specified. If the functional form of a model is incorrectly specified, the analysis based on confidence intervals may be misleading. The question addressed in this section is whether the logit model provides a satisfactory approximation to the true rollover curve. This amounts to asking whether F (see Equation 1) is indeed the cumulative distribution function of the logistic distribution or some other function.

The true, but unknown, functional form can be estimated using a nonparametric binary-response model—a model in which the functional form F is not assumed to be known. Hence, it is of interest to compare the estimated logit model with the estimated nonparametric model. The objective of this comparison is to reveal the extent to which the logistic cumulative distribution function provides a good approximation of the true, but unknown, functional form.

Estimation of the nonparametric model is challenging because it involves estimating the unknown functional form using the data. The nonparametric rollover curve was estimated by kernel regression, a well-known nonparametric estimation method. This method is discussed briefly by Greene (2000, 844–846); a more detailed exposition is found in Härdle (1990). In this section, the nonparametric estimation is illustrated using the binary data for Florida only. This nonparametric analysis was performed for illustrative purposes using a subset of the available data. A more extensive analysis using a larger dataset will be required if the nonparametric model is to be used to obtain a rollover curve that provides information at the national level.

Figure 3-9 presents the nonparametric estimate of the rollover curve and uniform 95 percent confidence intervals. This figure shows that an increase in SSF reduces the probability of rollover. The estimated rollover curve based on the logit model appears to be a reasonable approximation to the nonparametric-based rollover curve using limited data, suggesting that the logit model is a sensible starting point for constructing a rollover rating system.

ROLLOVER CURVE AND STAR RATING SYSTEM

NHTSA derived its five star rating categories for rollover resistance from the estimated rollover curve shown in Figure 3-1. Two features of the agency's approach are of concern:

- The lack of accuracy resulting from the representation of a continuous curve by an overly coarse discrete approximation, and
- The lack of resolution resulting from the choice of breakpoints between star rating categories.

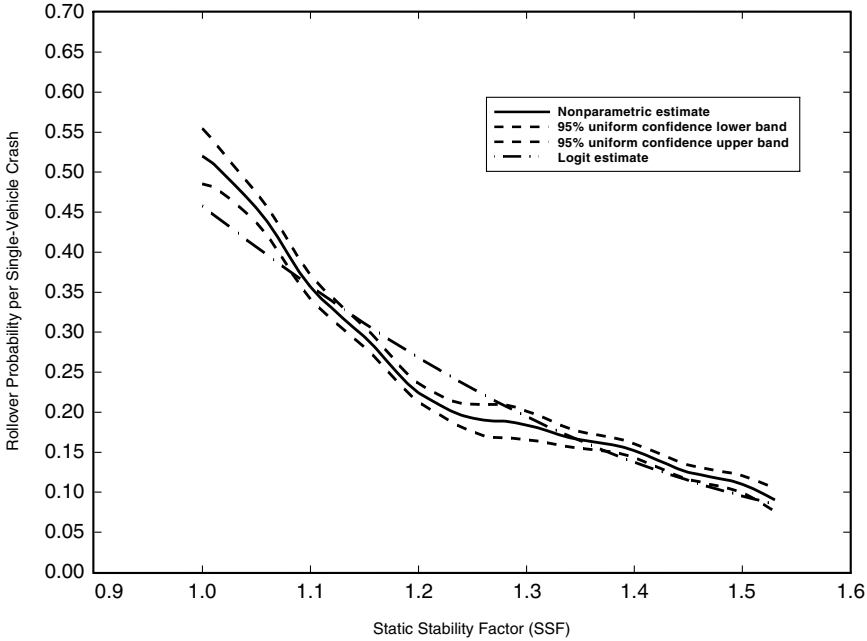

FIGURE 3-9 Nonparametric estimate of probability of rollover using a quartic kernel with a bandwidth of *h* = 0.07, *n* = 37,680. (NOTE: Both the logit and nonparametric curves illustrated in this figure are for Florida only.)

These related problems of accuracy and resolution need to be addressed in developing future consumer information on rollover to provide consumers with more useful and practical advice, commensurate with the evidence from real-world crash data.

Accuracy

The approach adopted by NHTSA was to approximate a continuous curve—the estimated rollover curve—by a discrete approximation comprising five levels, or star rating categories. This is a coarse approximation that results in a substantial loss of information, particularly at lower SSF values where the rollover curve is relatively steep. A more accurate approximation of the continuous rollover curve would use more levels. There would still be artificial jumps at the breakpoints between the levels, but this is an inherent feature of all such discrete rating systems.

Figures 3-10 and 3-11 show two examples of defining breakpoints on the SSF axis. The first figure is an example of a coarse four-step approximation to the estimated curve—the lines are drawn at 10, 20, and 30 percent. The horizontal lines drawn at these points define four bands of SSF values. Note that these bands are not of equal width since the curve is not a straight

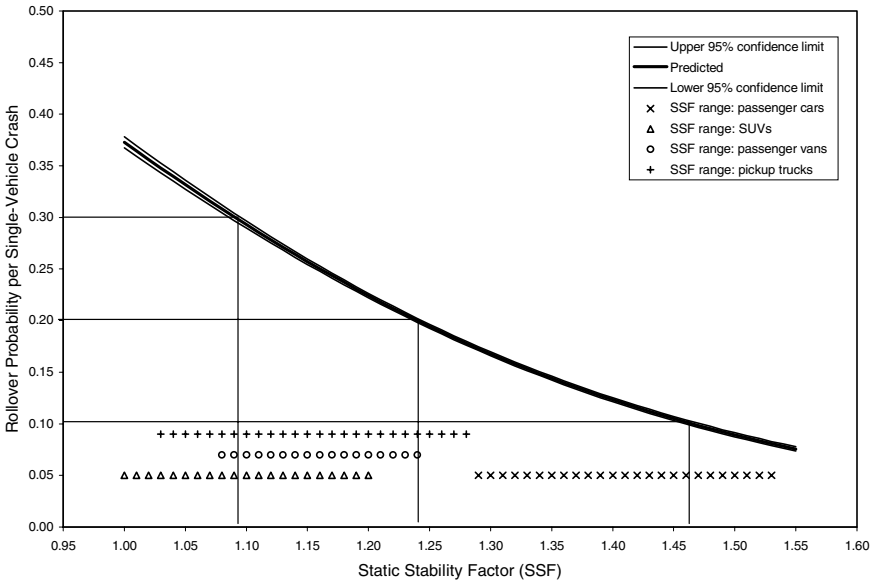

FIGURE 3-10 Example of using four SSF categories based on the model in Figure 3-2.

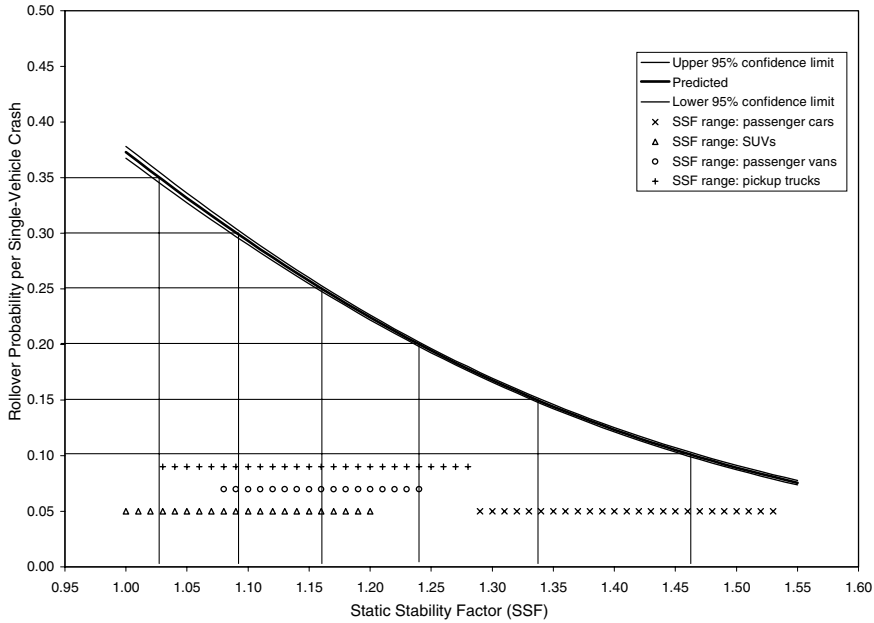

FIGURE 3-11 Example of using seven SSF categories based on the model in Figure 3-2.

line at a 45-degree angle. Figure 3-11 shows six lines drawn horizontally at 10, 15, 20, 25, 30, and 35 percent. These lines provide a finer resolution on the SSF axis with seven bands. Of course, the more bands there are, the closer is the approximation to the curve.

Resolution

A further problem with the star rating categories derives from the decision to select the breakpoints between categories by dividing the probability axis of the rollover curve into four equal 10-percentage-point probability intervals, plus one additional interval above 40 percent probability. The first interval represents rollover probabilities of 0–10 percent (five stars), the second represents probabilities of 10–20 percent (four stars), and so on up to probabilities greater than 40 percent (one star). However, equal intervals on the probability axis do not produce equal intervals on the SSF axis because the rollover curve is not a straight line, and its slope changes with changing SSF.

One important consequence is that the SSF intervals in the lower SSF range (up to approximately 1.25), where rollover probability changes quite rapidly with changing SSF, are too wide to permit discrimination among vehicles, even though analysis using the logit model indicates that such discrimination is statistically meaningful on the basis of real-world crash experience. The choice of breakpoints for the rating system does not exploit the richness of the available data, and consequently the rating system is not as informative as it could be. For example, the rollover resistance ratings for both SUVs and passenger sedans each span two rating categories: SUVs receive either two- or three-star ratings, whereas passenger sedans receive four- or five-star ratings. However, SUVs are more susceptible to rollover than are passenger sedans, and the rate of reduction of rollover probability with increasing SSF is greater for SUVs. The lack of resolution for vehicles with higher rollover risk detracts from the usefulness of the rating system, and a finer distinction among the rollover propensities of SUVs could be helpful in informing vehicle purchase decisions. Alternatively, as noted in Chapter 4, it may be possible to avoid the use of categories altogether. This could be achieved by presenting the actual SSF values or rescaled SSF values—for example, on a scale of 0–100.

FINDINGS AND RECOMMENDATIONS

Findings

3-1. Analysis of single-vehicle crash data indicates that an increase in SSF reduces the likelihood of rollover.

3-2. NHTSA's implementation of an exponential model does not provide sufficient accuracy to permit discrimination of the differences in rollover risk associated with different vehicles within a vehicle class.

3-3. The relation between rollover risk and SSF can be estimated accurately with available crash data and software using a logit model.
3-4. Given the richness of the available data, nonparametric analysis can provide a closer approximation of rollover risk.
3-5. The current practice of approximating the rollover curve with five discrete levels does not convey the richness of the information provided by available crash data.

Recommendations

3-1. Instead of using an exponential model, NHTSA should use a logit model as a starting point for analysis of the relation between rollover risk and SSF.
3-2. For future analysis of rollover risk, NHTSA should employ nonparametric methods.
3-3. NHTSA should consider a higher-resolution representation of the relation between rollover risk and SSF.

REFERENCES

Abbreviation
NHTSA National Highway Traffic Safety Administration

Donelson, A.C., and R.M. Ray. 2001. *Motor Vehicle Rollover Ratings: Toward a Resolution of Statistical Issues*. Exponent Failure Analysis Associates, Inc., Menlo Park, Calif.

Federal Register. 2000. Consumer Information Regulations; Federal Motor Vehicle Safety Standards; Rollover Prevention; Request for Comments. Vol. 65, No. 106, June 1, pp. 34,998–35,024.

Federal Register. 2001. Consumer Information Regulations; Federal Motor Vehicle Safety Standards; Rollover Prevention; Final Rule. Vol. 66, No. 9, Jan. 12, pp. 3,388–3,437.

Greene, W. H. 2000. *Econometric Analysis, Fourth Edition*. Prentice-Hall, Inc., N.J.

Härdle, W. 1990. *Applied Nonparametric Regression*. Cambridge University Press, Cambridge, U.K.

NHTSA. 1999. Passenger Vehicles in Untripped Rollovers. Research Note, National Center for Statistics and Analysis.

4
Consumer Information

The congressional mandate for this study requested an assessment of the practicality and utility to the public of the National Highway Traffic Safety Administration's (NHTSA) consumer information on rollover. As discussed in Chapter 2, the static stability factor (SSF)—which forms the basis of NHTSA's rating system for rollover resistance—is a useful metric in assessing a vehicle's rollover propensity. However, there were deficiencies in NHTSA's use of statistical analyses of crash data to develop its rating system (see Chapter 3). Investigation of consumer response to NHTSA's rollover information requires empirical data on vehicle buying behavior in general and on consumers' use of NHTSA's rollover resistance rating system in particular. The committee was unable to obtain such data. Consequently, the committee addressed this part of its charge by extrapolating from research on other consumer products, using its judgment, and evaluating the process used by NHTSA to develop its rollover rating system.

This chapter first presents the results of the committee's evaluation of the practicality and utility of NHTSA's rollover resistance ratings. Next is a discussion of the dissemination and use of NHTSA's rollover information. Suggestions for NHTSA's future development of consumer information on motor vehicle rollover in both the near and longer terms are then presented. The chapter concludes with the committee's findings and recommendations in the area of consumer information.

PRACTICALITY AND UTILITY OF NHTSA's ROLLOVER RESISTANCE RATINGS

Every day consumers make decisions about buying goods and services using processes and behaviors that researchers have studied for more than 30 years (see, for example, Bettman 1979; Bettman et al. 1998; Hansen 1972; Howard and Sheth 1969; Nicosia 1966; Simonson et al. 2001). Consumers obtain information about the attributes of products and their alternatives from a wide range of sources, and the difficulty of their choices increases with the amount of information they must consider (Bettman et al. 1991). Advances in information technology have now made it possible for Americans to access a wealth of product information far beyond what was previously available. In addition, the opportunity to purchase products over the Internet is changing shopping behavior.

For most consumers, buying a vehicle represents a major financial decision—one of the larger purchases they will make in their lives in dollar

terms. The decision is a difficult one given the numerous choices involved (e.g., vehicle cost, size, type, appearance, quality, reliability, safety, performance and handling, fuel economy), together with consumers' preferences and constraints (e.g., budget, driving style, need to carry multiple passengers). Adding to the difficulty, each year automobile manufacturers introduce new vehicle makes, models, and features or options from which to select (e.g., side airbag curtains, electronic stability control, hybrid propulsion systems). Although manufacturers perform extensive market research and obtain proprietary information about the preferences of their customers, the open literature contains few reports of research on the behavior of buyers of the approximately 17 million light vehicles sold in the United States annually.[1]

Consumer Interest in and Use of Vehicle Safety Information

Many consumers shopping for an automobile regard vehicle safety as important. In a survey for the Insurance Research Council (1999), 78 percent of respondents who had recently leased or purchased a vehicle stated that vehicle safety was important in their purchase decisions. In a 1999 study conducted by DaimlerChrysler, 84 percent of consumers said safety features were an extremely or very important reason for buying a vehicle (*Automotive News* 2000). General Motors reported that in 1994, consumers ranked safety sixth of 38 possible reasons for choosing the vehicle they purchased instead of their second-choice vehicle (General Motors Corporation 1994).

In discussions with vehicle manufacturers (see Appendix B), members of the committee heard about the diversity of consumers: some place a great deal of weight on vehicle safety in their purchase decisions, whereas others place relatively little weight on safety relative to other factors. Within the group of consumers who regard vehicle safety as important, there are varying levels of interest in or capacity for dealing with the complexity of the information involved. Some consumers simply may want assurance that a vehicle is safe without any details about what "safe" means. Others may want to understand all the technical details of each vehicle and be able to make their own comparisons with other vehicles and safety determinations. Given this variation, it is impossible to use a "one size fits all" approach to the provision of consumer information without giving some consumers much less information than they want and others much more. Therefore, as recommended in an earlier study (TRB 1996), the development of easily accessed presentations of automotive safety information that increase hierarchically in detail is a logical approach to meeting the information needs of consumers.

[1] This statistic reflects 1999 sales as reported by the University of Michigan (2001).

Many different sources—including car dealers, newspapers, magazines, brochures, television, friends, family, and the Internet—provide vehicle safety information. A 1999 survey by Roper Starch for the Insurance Research Council revealed the following as popular sources of information for respondents: car salespeople (37 percent), *Consumer Reports* (29 percent), newspaper reports and car magazines (18 percent), automobile manufacturers (17 percent), friends (15 percent), and the Internet (14 percent) (Insurance Research Council 1999). These percentages are expected to change significantly as a result of the rapidly growing use of the Internet. At the same time, the amount and types of vehicle safety information obtained from these sources and stakeholders and the extent to which consumers seek and use vehicle safety information remain unknown, except anecdotally.

Little is known regarding what consumers know and believe about the factors that can lead to rollover, the technologies available to improve a vehicle's crash avoidance and crashworthiness capabilities, what can be done to reduce the risk of injury from a rollover, and how the available information should be used. Current knowledge suggests that vehicle purchase decisions occur in two stages: choice of vehicle class, followed by choice of specific make and model (TRB 1996). Thus, information on rollover resistance that distinguishes among vehicle classes could influence first-stage decisions, while information that distinguishes among vehicles within a class could influence second-stage decisions.

Development of Vehicle Safety Information

Given the complexity discussed above, the challenge of developing an effective consumer information rating system is clear. According to *Shopping for Safety,* a previous congressionally mandated report on consumer automotive safety information (TRB 1996, 3), "to be most effective, consumer safety information should be based on a systematic understanding of what consumers know about vehicle safety and how they go about obtaining and using information." Although some relevant research has been documented since that report was published, the systematic understanding required for the development of effective consumer safety information is still lacking.

Several researchers have identified good practices in the development of consumer information, including product rating systems. For example, Wogalter and colleagues (1999) suggest the following approach:[2,3]

- In the initial phase of a project, investigate a number of candidate information systems, and select a few of the most promising for further study.

[2] In a presentation to the committee on May 29, 2001, Mike Wogalter of North Carolina State University discussed means of presenting risk-based information to consumers.

[3] *Shopping for Safety* (TRB 1996) describes similar elements of an approach to designing risk messages that are effective in supporting consumer decision making.

- Involve small samples of relevant consumer groups in formative research on the candidate systems, and conduct structured, open-ended interviews to determine relevant consumer beliefs.
- Engage experts in appropriate technical areas (e.g., automotive safety, communication, and graphic design).
- Evaluate candidate messages empirically, and use the findings to guide modifications to the candidate systems, with retesting as needed in an iterative design process (Morgan et al. 2001).[4]
- Follow the preliminary testing with more extensive, formal testing of information products using large samples to validate the results from small samples, and to determine whether consumers understand the limits of the information and can apply it appropriately in a practical situation.

Characteristics of human information processing, especially inherent limitations on people's ability to process information, also need to be taken into account (e.g., Miller 1956). For example, side-by-side presentation of information comparing the ratings of different vehicles may reduce information processing needs and support more thorough consideration of vehicle attributes and alternatives. Providing a frame of reference is likely to affect the way information is perceived; thus, for example, preferences relative to risks presented in terms of potential losses may differ from preferences relative to the same risks presented in terms of gains (Fischhoff et al. 1978; Plous 1993; Levin et al. 1998). In the specific case of rollover, information presented in terms of rollover resistance could influence decisions differently from the same information presented in terms of rollover propensity (Bettman et al. 1998). Failing to provide sufficient context or to define concepts and terms clearly can undermine any communication. Consequently, the development of effective communication typically begins with a statement of objectives and creation of a sound process for achieving those objectives.

NHTSA's Objectives for Consumer Information on Rollover

Consumer information on rollover is only a portion of the safety information offered by NHTSA. The agency has explicitly stated its objectives for providing this information based on SSF as follows (*Federal Register* 2000):

- Enable prospective purchasers to make choices about new vehicles based on differences in rollover risk.

[4] When graphics are desired, the population stereotype method is one useful approach. This method, which entails asking users to draw graphics and using those graphics as a source of ideas for designers, has been shown to increase the likelihood that graphics will be understood by users (Green 1979; Eberhard and Green 1989; Mudd and Karsh 1961; Green 1993).

- Provide a market incentive to manufacturers to design their vehicles with greater rollover resistance.
- Inform drivers who choose vehicles with less rollover resistance that their risk of harm can be greatly reduced with seat belt use to avoid ejection.

NHTSA's Process for Developing Consumer Information on Rollover

In 1997, NHTSA established a new department within its Plans and Policy Division—the Consumer Automotive Safety Information Division (Consumer Division)—and assigned this new division the task of developing and disseminating consumer safety materials. The Consumer Division has responsibility for the presentation of safety information in the New Car Assessment Program (NCAP), although other groups within NHTSA provide the technical basis for this information. Funding for both consumer research and publications comes from the NCAP budget, and totaled about $350,000 during the first 2 years of the division's existence, rising to about $500,000 during fiscal year 2001. Each year, approximately $200,000 of this funding goes to printing costs, leaving limited funds for the research and evaluation activities needed to provide effective support for information campaigns on specific automotive safety topics, such as rollover. Few of the division's staff of seven have formal qualifications in psychology or consumer research; only two engage in research, on a part-time basis.

In the case of rollover information, the Consumer Division was provided with the rollover curve derived from crash data (see Chapter 3) and key items for inclusion in explanatory text. The division approached its task of identifying an effective means of communicating the relation between SSF and rollover risk to consumers using the results of two series of focus group studies (Equals Three Communications 1999b, 2000). NHTSA had previously used focus group studies in support of its communication efforts—most recently the rollover warning label currently found in sport utility vehicles (SUVs) and light trucks (Nancy Low and Associates 1996; Equals Three Communications 1999a).

In the first phase of the development of the rollover rating system, six focus groups were conducted with new vehicle owners or lessees in Dallas, Texas; Overland Park, Kansas; and Richmond, Virginia (Equals Three Communications 1999b). Each focus group began with a discussion of awareness of the rollover problem. Participants attributed rollovers primarily to driver-related behaviors and said they believed that rollover was more of an issue for SUVs than for other vehicles. When asked where they would look for information on rollover, participants named *Consumer Reports* and insurance industry representatives. Participants stated repeatedly that rollover risk would be only one of several pieces of information they might take into ac-

count when buying a new vehicle, and stated their belief that rollover information would likely influence only those who really care about safety.

The second part of each focus group involved investigating the clarity of several different concepts for presenting vehicle rollover information. Participants were asked to react to five rollover information formats for both labels (see Figure 4-1) and brochures:

- Option 1—a star rating system with five categories, where one star indicates the least stable vehicle and five stars the most stable;
- Option 2—a line graph labeled with SSF values from 1.06 to 1.44;
- Option 3—a three-point tilted-vehicle graphic indicating whether a vehicle is "more stable," "average," or "less stable";
- Option 4—a three-point letter grade (A, B, C), where A indicates "more stable," B indicates "average," and C indicates "less stable"; and
- Option 5—a number score on a scale of 90–150, with 90 being the least stable and 150 the most stable.

The findings from the focus groups indicated that some participants did not have a good understanding of SSF and the rollover information presented. Even after the discussion moderator had provided an easy-to-understand description of SSF, participants tried to interpret this measure as a historical statistic on the relative frequency of rollover, rather than as a measure of rollover resistance in the event of a single-vehicle crash. In addition, participants made comments about alternatives to the five-star system and the specific scale ranges presented (e.g., lack of power to differentiate with a three-point scale, difficulty of using subdecimal differences in the 1.06–1.44 range, unfamiliarity of the 90–150 range). The study confounded graphical and scale attributes instead of varying them systematically; therefore, it was impossible to gauge the independent effects of varying the graphical representation (e.g., stars, line graph) and varying the scale (e.g., letter grade, number score). Although participants rated the star presentation as the best overall concept, they rated the tilted-vehicle icon as the most convincing graphic. Some participants proposed that this icon be incorporated into a presentation—modeled on the miles-per-gallon fuel pump label—that would show the tilted-vehicle icon enclosing a number between 1 and 10, where 1 would indicate the worst rollover performance and 10 the best.

NHTSA subsequently decided to use a five-star rating system for rollover resistance and developed some explanatory text to accompany these ratings. A further investigation by Equals Three Communications (2000) explored consumer awareness and understanding of rollover problems and evaluated comprehension of two alternative texts for explaining the rollover resistance ratings. The study involved 12 focus groups in Chicago, Illinois, and Dallas,

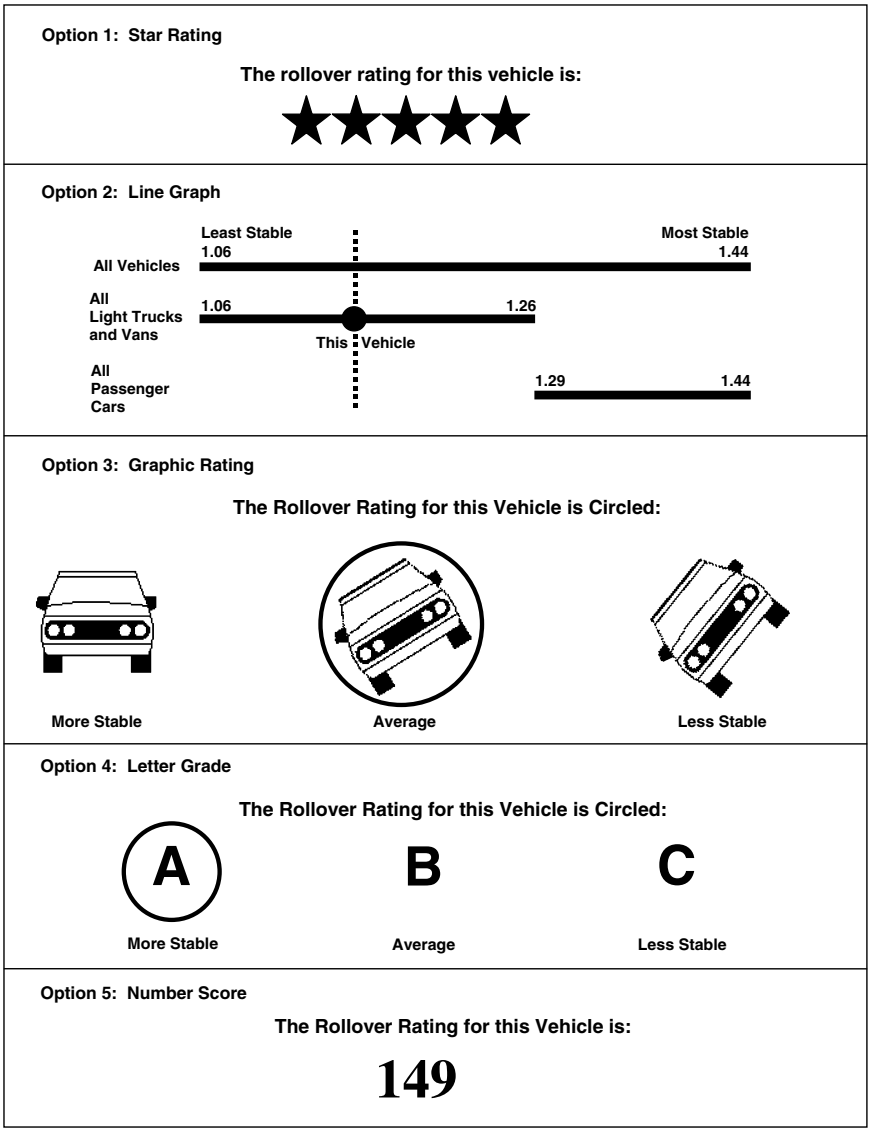

FIGURE 4-1 Options for rollover information labels. (SOURCE: Equals Three Communications 1999b.)

Texas, comprising a total of 108 licensed drivers who owned or planned to purchase new or recent automobiles, minivans, pickup trucks, or SUVs. All participants had indicated during prescreening that safety was "somewhat" or "very" important to them when shopping for a personal vehicle.

In general, as in previous focus group studies, participants expressed awareness of the rollover problem, commonly associated it with SUVs, and attributed it to driver behavior compounded by environmental factors. They generally understood the concept that in the rating system, more stars are better. However, some participants found the inverse relationship between rollover propensity and number of stars confusing, with more than 10 percent believing after reading the explanatory text (short or long version) that a vehicle with fewer stars is safer. Approximately two-thirds believed after reading the longer explanatory text that the rollover ratings described an "estimate of risk of rollover if run off road," the answer the study designers considered correct for a multiple-choice question in the study. "Being in a single-vehicle crash" does not necessarily mean "if run off road," and "risk of rollover" easily could be misinterpreted as a more comprehensive measure of risk than the likelihood of rollover. Some of the responses to open-ended questions were consistent with this misinterpretation. Also, the two texts appear to have been evaluated sequentially, which means their assessed effects were not independent. A preferable approach would involve asking half the participants to read the short text first and then the long version, and asking the other half to read the two in the reverse order.

NHTSA's process stopped with the focus groups. Once the rollover resistance ratings had been prepared for dissemination to the public, the agency did not conduct any large-scale formal testing of its information products. Furthermore, NHTSA has not surveyed consumers to determine whether the published ratings are influencing their vehicle purchase decisions, and the committee could not find analogous surveys by the industry.

Comparison of NHTSA's Process with Recommended Practices and Criteria of Demonstrated Validity

Comparison of communications against standard evaluation criteria provides some basis for judgment of the communications' quality, even though such assessments cannot replace appropriate user-based evaluation (Schriver 1996). In the absence of empirical data on consumer behaviors, therefore, the committee compared NHTSA's process with the recommended practices discussed above and identified three important areas of concern: (1) overreliance on focus groups, (2) the lack of an iterative design process, and (3) the absence of formal testing of consumer information. Evaluation of the agency's rollover resistance ratings relative to the criteria for good summary measures identified in *Shopping for Safety* (TRB 1996, p. 110) also revealed some areas for improvement.

Use of Focus Groups

Researchers originally created focus groups as a means of fleshing out hypotheses (Merton 1987; Merton and Kendall 1946; Merton et al. 1956, 1990). While collecting focus group data is a first step in developing consumer information, such studies by themselves cannot reveal much more than group knowledge of an issue. Consequently, overreliance on focus groups can be problematic.[5]

Focus groups by themselves are not able to provide sufficient evidence to support reliable conclusions about what consumers know or believe about rollover risk, or whether the ratings are meaningful, easy to interpret and understand, and unambiguous for the public. According to recommended practices for developing consumer information, structured, open-ended interviews with a representative sample of consumers would be a better way to determine consumers' beliefs about vehicle safety and rollover. Similarly, consumers' understanding of proposed summary measures and supporting text might be assessed with equal or more effectiveness using one-on-one interviews or written questionnaires to determine individual responses, instead of gauging collective knowledge by means of focus groups. Additionally, as noted above, the focus group studies suffered from design flaws that further limited their usefulness (e.g., no systematic variation of variables, use of sequential evaluations susceptible to bias).

Iterative Design Process

An effective communication process requires iteration so that information can be tested, refined, and retested. Even though the star presentation emerged as the best overall concept in NHTSA's first set of focus groups (Equals Three Communications 1999b), the participants also provided an alternative presentation (tilted-vehicle icon and numeric rating) and suggested that SSF and the rollover information presented were not well understood. NHTSA did not explore the alternative presentation or further iterate between design and evaluation. The second set of focus groups (Equals Three Communications 2000) examined the understandability of the five-star rating system selected by NHTSA, as well as two alternative explanatory texts. Almost all participants in these focus groups understood that "more stars are better," but the consumer comments indicated that the explanatory text could have been improved. For example, many participants found the ratings not sufficiently comprehensive, lacking reference to driver behavior and driving conditions,

[5] Group processes are known to affect individual responses and can shift the entire group's judgment toward the position that first dominates in the group, as in group polarization (Isenberg 1986; Myers and Lamm 1976; Whyte 1993; see Plous 1993 for a general discussion).

and some participants would have liked more information on how to avoid a rollover crash.

Formal Testing of Consumer Information

Once information products appear ready to be widely disseminated, more extensive testing is desirable using large samples to determine whether consumers are able to apply the information (see, for example, Wogalter et al. 1999). NHTSA assessed the extent to which consumers could use its proposed rollover information by asking participants in the second set of focus groups to complete a worksheet including two multiple-choice questions (one of which was discussed above). However, these focus groups involved only 108 drivers in two geographic markets. The report on these focus groups by Equals Three Communications (2000) cautions the reader against "making quantitative conclusions from the results of this study" and warns about possible problems with the small samples and the extent to which the results are representative of a larger population.

Criteria in Shopping for Safety

Revisiting the criteria for good summary measures of vehicle safety performance provided in *Shopping for Safety* (TRB 1996, 110) could help NHTSA improve its vehicle safety information. Three of these criteria are particularly relevant to efforts aimed at improving the rollover resistance rating system:[6]

- *Conveys the degree of uncertainty associated with current knowledge and expert judgment.* The current information in NCAP provides no indication of the uncertainty resulting from the sampling, data averaging, and statistical modeling procedures used in deriving the ratings from crash data (see Chapter 3). The text simply states that "the ratings were found to relate very closely to the real-world rollover experience of vehicles," leading the consumer to believe (incorrectly) that the star ratings can be assigned to individual vehicle models without ambiguity.
- *Is transparent and flexible, allowing more-sophisticated users to understand how summaries are produced and to apply different judgments to obtain their own summaries as desired.* NCAP notes that the ratings "relate very closely" to the real-world rollover experience of vehicles as characterized by "220,000 actual single-vehicle crashes," but there is no attempt to explain in

[6] Other sections of this chapter discuss the other three criteria: (*a*) related meaningfully to actual safety for the range of highway conditions in which the vehicle will be operated; (*b*) provides a summary whose use or interpretation does not require extensive manipulation or combination with other information; and (*c*) is unambiguous and easy to understand and use.

any detail how the ratings were derived. Consequently, more-sophisticated users cannot easily understand how NHTSA produced the current summaries.

• *Allows the consumer to place the information in context.* NHTSA provides the rollover ratings in NCAP, together with other vehicle safety ratings. The absence of information on the relative importance of the different ratings and how to combine them remains a potential source of confusion and does not help the consumer determine which is the safest car. In addition, appropriate use of the ratings requires the ability to put the information in context (i.e., understanding that the ratings predict the likelihood of rollover given that a single-vehicle crash has occurred).

AVAILABILITY AND USE OF NHTSA's ROLLOVER RESISTANCE RATINGS

As discussed earlier, the absence of empirical data on consumer behavior prevented the committee from making a definitive judgment about the usefulness of NHTSA's rollover ratings to consumers. The ratings may be useful in helping consumers make informed purchase decisions, but the committee has no way of establishing this. However, some evidence suggests that the ratings are of interest to the public. As noted, NHTSA incorporated the rollover resistance ratings for a number of vehicles into its NCAP program, available on the agency's website (www.nhtsa.dot.gov) (see Appendix D). Data provided to the committee by NHTSA provide some insights into Internet users' interest in the ratings.

Dissemination of the Ratings by NHTSA

NHTSA's strategy for dissemination of the star ratings for rollover resistance and associated information focuses primarily on the Internet—an important source of information on automobiles, at least for some consumer segments.[7] As of August 2001, NHTSA had included three tiers of information on rollover on its website (see Appendix D):

• The star ratings themselves, along with the vehicle class, drive (front, rear, or 4 × 4), SSF, some vehicle details (including body style and trim, engine, transmission, tire size, and major options such as sunroof), and whether the vehicle has electronic stability control;

• A description of the rating system, along with frequently asked questions; and

• Graphics depicting rollover and crash trajectories, frequencies, and rates.

[7] A 2000 proprietary survey by the Gartner Group indicated that 45 percent of vehicle purchasers researched online, and 3 percent bought their vehicles over the Internet (Macaluso 2001).

NHTSA also has made the rollover ratings available in a somewhat different format in its *Buying a Safer Car, 2001* brochure. As of September 2001, the agency had printed 125,000 copies of this brochure incorporating rollover resistance ratings. All have been distributed to various groups, including manufacturers and repair shops, and at auto shows, car races, and conferences. Partnerships with other organizations, such as the American Automobile Association, have increased distribution further.

Use of NHTSA's Rollover Information on the Internet

NHTSA provided the committee with a Webtrends report[8] detailing visits to the rollover section of its website (www.nhtsa.dot.gov/hot/rollover/) for a 6-week period from February 28 to May 14, 2001. During that period, almost 275,000 visits occurred to the entire site, or about 3,600 per day, representing approximately 54,600 unique visitors; the average session length was 2 minutes, 22 seconds. The number of visitors in a year is expected to be about an order of magnitude greater, but still a small fraction of all vehicle buyers.

Table 4-1 lists some of the most requested pages and their mean viewing times. All of the times exceed 1 minute, with most being around 2 or 3 minutes, suggesting that users are finding the materials of some interest since they do not merely click rapidly through to other sites. Further, from the overall distribution statistics (provided to the committee but not shown in the table), just under

TABLE 4-1 Statistics Detailing Visits to the Rollover Section of NHTSA's Website, February 28 to May 14, 2001

Page Title	URL	Visitor Sessions	Mean Time Viewed (minutes: seconds)
Frequently Asked Questions About Rollover Resistance Ratings	www.nhtsa.dot.gov/hot/rollover	36,107	1:03
Rollover Rated Vehicle Details	www.nhtsa.dot.gov/hot/rollover/fullWebd.html	18,874	3:02
New Car Assessment Program Frontal and Side Crash Test Ratings	www.nhtsa.dot.gov/hot/rollover/2001Rollover.html	17,997	3:18
NHTSA's Rollover Resistance Ratings—Figures	www.nhtsa.dot.gov/hot/rollover/figures.html	5,364	2:24
NHTSA's Rollover Resistance Ratings—Q&A	www.nhtsa.dot.gov/hot/rollover/QnA.html	663	1:56

[8] wysiwyg://CONTENT.1/http://www.nhtsa.dot.gov/etc/reports/rollover_01_b.html

half of the visits lasted less than 1 minute, 12 percent lasted 1–2 minutes, almost 10 percent lasted 2–3 minutes, almost 7 percent lasted 3–4 minutes, and more than 1 percent lasted up to 10–11 minutes. A review of the statistics also reveals that most visitors to the rollover section of the site (66.3 percent) came there from another part of the NHTSA website. NHTSA does not collect evidence of actual use by surveying visitors to its site or by obtaining direct observation of users accessing the site (e.g., in a field usability test).

FUTURE APPROACHES

Near Term

The committee believes NHTSA could implement significant improvements in its consumer information on rollover in the near term. From a process perspective, the use of recommended practices in developing consumer information and more thorough evaluation of candidate consumer information materials would be beneficial. The committee also urges that in further developing and revising specific features of its rollover information (see Chapter 5), NHTSA reconsider alternatives to the use of stars, expand the level and quality of its hierarchical information, and assist consumers in placing the information in the appropriate context.

Use of Recommended Practices

Following recommended practices and proven techniques for communicating risk-based information to consumers can help ensure that the information will be effective. In particular, NHTSA would benefit from greater use of an iterative process that takes appropriate account of consumers' reactions to candidate systems. Moreover, an appropriately constituted external advisory group could provide ongoing evaluation of the process, critique study designs, and recommend quality assurance steps.

Evaluation

NHTSA needs to test the effectiveness of consumer communications before putting them into widespread use, and continue to evaluate them once in use. The agency needs to evaluate rigorously how people are using the rollover resistance ratings in the context of the entire NCAP information program. Such evaluations could include experimental studies and protocol analysis of consumer understanding and use of the ratings, tracking of hotline calls, and periodic surveys of recent new car buyers to learn whether they were aware of the ratings when they purchased their vehicles and how they used this information in decision making.

Use of Stars

NHTSA would be well advised to reconsider whether stars are appropriate for conveying rollover ratings to consumers. One clear advantage to using stars is that many consumers are familiar with their use for other ratings.[9] However, the limited evidence gathered from focus groups indicates some comprehension problems, perhaps arising from the superficial similarity of the star rollover ratings to the NCAP frontal and side test crash ratings. These latter ratings are based on crash tests and provide information about a vehicle's crashworthiness, whereas the rollover ratings relate to a vehicle's crash propensity. In response to the focus group findings, NHTSA explicitly addressed two potential misconceptions: the explanatory text accompanying the ratings notes that they do not predict the likelihood of a crash or predict directly the risk of death or injury. The current practice of having these corrective statements embedded in the description of the rating system—instead of being provided directly with the ratings—reduces the likelihood that consumers will read that information.

One alternative to the star ratings would be to present SSF alone (or a rescaled version, for example, on a scale of 0–100), with a brief explanation of how it is calculated and a simple description of the relative stability of different vehicle classes (e.g., passenger cars, SUVs). Another option might be to present a rollover rating—instead of a rollover resistance rating—using a tilted vehicle or a similar graphic. Any candidate system would require appropriate testing to assess its effectiveness, using the procedures already discussed.

Hierarchical Information

Although some consumers may be content simply to know that "more stars means safer," evidence from focus groups (Equals Three Communications 2000) suggests that others would like more information on how to avoid a rollover crash. An improved hierarchy of information, at increasing levels of detail, would reduce the need for information designers to make trade-offs to favor simplicity.

Hierarchical organization within a page and within a website helps the reader keep track of where items are and how they are related. Hierarchical organization also facilitates searches for more details or for the bigger picture. For example, the top level of a "Buying a New Car" website could comprise a table of contents (or a site map), together with a description of the objectives of the site. This top level would set the context (see below) for more specific site information. The table of contents would provide links to items at the next level down in the hierarchy, such as vehicle reliability and vehicle

[9] Many focus group participants noted the similarity of the stars to hotel ratings or to the five-star safety ratings in advertisements from automobile manufacturers (Equals Three Communications 2000).

safety. The vehicle safety web page would be organized similarly, with a general overview and links to specific topics such as the vehicle, the driving environment, and the driver. Under the vehicle category, the reader would find information on vehicle safety ratings, including the rollover resistance ratings.

The committee believes it would be desirable for NHTSA to expand both the levels and quality of its hierarchy of information on rollover, particularly since the Internet is the agency's primary means of disseminating rollover information and is highly conducive to hierarchical presentation of information. For example, information on how the rollover resistance ratings are calculated and assigned, including the rollover curve, could be added to the site for consumers interested in this level of detail.

Context

Rollover is one of many crash risks consumers may consider when purchasing a vehicle. How this risk should be weighted relative to other crash risks or other safety information is contingent on driver behavior. NCAP does not address the issue of combining ratings for crashworthiness and rollover resistance, although the NHTSA website includes links to sites of other organizations that crash test vehicles and provide the former ratings.[10] This feature may be helpful for consumers seeking to put ratings in context, but additional information from NHTSA on how to combine the different NCAP ratings would be helpful for consumers seeking to make informed car-buying decisions. The experience of the risk assessment community in combining risk measures could be helpful for putting different measures of risk in context (see, for example, Garrick and Kaplan 1995).

Longer Term

Comprehensive Rollover Rating

One of the committee's recommendations in the area of vehicle dynamics (see Chapter 2) is that NHTSA pursue the use of dynamic testing to supplement the information provided by SSF (see Chapter 5). Once appropriate dynamic testing has been selected, NHTSA will need to consider how best to communicate to consumers the combined information about static and dynamic factors related to rollover. *Consumer Reports* currently provides information on dynamic testing of rated vehicles, but the committee lacks empirical evidence about consumers' use of this information. There is no evidence indicating whether consumers can or cannot understand and interpret infor-

[10] Insurance Institute for Highway Safety (United States), National Organization for Automotive Safety and Victims' Aid (Japan), National Roads and Motorists' Association Crash Testing (Australia), European New Car Assessment Programme (Europe).

mation from dynamic tests. Nevertheless, the use of established procedures to develop and evaluate such information should help ensure that consumers will be able to understand and use it.

Single Summary Measures

The committee's discussions with representatives of Consumers Union and others indicated that many consumers simply want to know "how safe this vehicle is" and "how this vehicle compares with alternatives in terms of safety." Currently, consumers cannot find simple answers to these questions. Safety depends on many factors, including the vehicle's design, road conditions, weather, and driver behavior.

Summary measures of vehicle safety can assist consumer decision making by simplifying comparisons of safety attributes among vehicles. A number of summary rating measures of vehicle safety are being developed and employed around the world, all using different data and different methods to combine the data. This year, for example, Consumers Union introduced for the first time an overall vehicle safety assessment that integrates key information from its own performance tests for crash avoidance with the crashworthiness information available from NHTSA and the Insurance Institute for Highway Safety (*Consumer Reports* 2001). Other summary rating systems are used in the United States (e.g., www.crashtest.com) and around the world (e.g., New Car Assessment Japan, Euro NCAP). The Safety Rating Advisory Committee (SARAC)—made up of international safety experts—has investigated the validity of various rating systems and the conflict that could occur when those systems result in different rankings for the same vehicle. SARAC found that different approaches can result in sizeable differences in vehicle rankings (Zeidler 2001), and that reaching consensus is difficult.[11] There are also some drawbacks to providing a single summary measure. A major concern is that such a measure could conceal large variations in performance across different test types, with the possible result of masking some poor performers.[12] Despite these concerns, the committee suggests that, in the context of its longer-term initiatives to improve consumer automotive safety information, NHTSA monitor efforts by groups in the United States and overseas to develop summary measures of vehicle safety performance and review the options for developing its own summary measure of overall motor vehicle safety.

[11] In lieu of collaborative international efforts such as SARAC, countries may (and do) adopt differing approaches to vehicle safety ratings and information. What the effects of such differences are or might be is an empirical question beyond the scope of this study.

[12] For example, consider two vehicles that have the same overall "acceptable" rating according to a system that categorizes vehicles as good, acceptable, marginal, or poor. Whereas one vehicle could have acceptable ratings across the board, the other could be good in some areas and poor in others. In general, these concerns could be addressed by making the measure transparent and providing a matrix with the ratings of individual components, for example.

FINDINGS AND RECOMMENDATIONS

Findings

4-1. There is a gap between recommended practices for the development of safety information and NHTSA's current process for identifying and meeting consumer needs for such information.

4-2. The focus group studies NHTSA used to develop its star rating system for rollover resistance were limited in scope and inadequate in design. Furthermore, empirical studies have not been undertaken to evaluate consumers' use of the ratings in judgments about vehicle safety or purchase decisions.

4-3. The information accompanying the rollover resistance ratings does not explain how to use them in the context of other safety ratings and information or provide specifics for the information-seeking consumer, such as how the ratings were derived.

Recommendations

4-1. NHTSA should implement an ongoing process for developing and evaluating its consumer vehicle safety information.

4-2. NHTSA should give consumers more information that places motor vehicle risks in an overall context, and rollover risks specifically within that larger context. A hierarchical presentation of information could be beneficial in meeting varied consumer needs.

4-3. NHTSA should continue to investigate presentation metrics other than the current rollover resistance stars, given that the lack of resolution and context in the star rating system and the system's superficial resemblance to the NCAP crashworthiness ratings could mislead consumers.

4-4. NHTSA should monitor efforts by groups in the United States and overseas to develop summary measures of vehicle safety performance, and review options for developing its own summary measure of overall motor vehicle safety.

REFERENCES

Abbreviation

TRB Transportation Research Board

Automotive News. 2000. Safety Steps into the Spotlight. March 6, p. 3.

Bettman, J.R. 1979. *An Information Processing Theory of Consumer Choice*. Addison-Wesley Publishing Company, Mass.

Bettman, J.R., E.J. Johnson, and J.W. Payne. 1991. Consumer Decision Making. In *Handbook of Consumer Behavior* (T.S. Robertson and H.H. Kassarjian, eds.), Prentice-Hall, Englewood Cliffs, N.J.

Bettman, J.R., M.F. Luce, and J.W. Payne. 1998. Constructive Consumer Choice Processes. *Journal of Consumer Research,* Vol. 25, pp. 187–217.

Consumer Reports. 2001. Which Cars Are Safer? Annual Auto Issue. pp. 16–19.

Eberhard, J., and P. Green. 1989. *The Development and Testing of Warnings for Automotive Lifts*. Technical Report UMTRI-89-26. The University of Michigan Transportation Research Institute, Ann Arbor.

Equals Three Communications. 1999a. Utility Vehicle Rollover Safety Label—Summary of Research Findings, Final. Prepared for NHTSA, Office of Planning and Consumer Programs, Consumer Automotive Safety Information Division, under contract No. DTOS59-95-00408. Bethesda, Md.

Equals Three Communications. 1999b. Research Report to the National Highway Traffic Safety Administration, Consumer Automotive Safety Information Division. Results of focus groups in Dallas, Texas, Overland Park, Kansas, and Richmond, Virginia, regarding rollover labeling and information. Bethesda, Md., May 13.

Equals Three Communications. 2000. Focus Group Report: Vehicle Rollover Focus Groups. Prepared for NHTSA. Bethesda, Md., Dec. 15.

Federal Register. 2000. Consumer Information Regulations; Federal Motor Vehicle Safety Standards; Rollover Prevention; Request for Comments. Vol. 65, No. 106, June 1, pp. 34,998–35,024.

Fischhoff, B., P. Slovic, and S. Lichtenstein. 1978. Fault Trees: Sensibility of Estimated Failure Probabilities to Problem Representation. *Journal of Experimental Psychology: Human Perception and Performance,* Vol. 4, pp. 330–344.

Garrick, B.J., and S. Kaplan. 1995. *Summary Report: A Risk-Based Approach to the Evaluation and Application of Disarmament Strategies and Technologies*. North Atlantic Treaty Organization Advanced Workshop, Visegrád, Hungary, May 19–23.

General Motors Corporation. 1994. *Continuous Automotive Market Information Program Buyer Behavior*.

Green, P. 1979. *Development of Pictographic Symbols for Vehicle Controls and Displays*. SAE 790383, Society of Automotive Engineers, Warrendale, Pa.

Green, P. 1993. Symbols for Controls and Displays. In *Automotive Ergonomics,* (B. Peacock and W. Karwowski, eds.), Taylor and Francis, London, United Kingdom, pp. 237–268.

Hansen, F. 1972. *Consumer Choice Behavior—A Cognitive Theory*. The Free Press/Macmillan, New York and London.

Howard, J.A., and J.N. Sheth. 1969. *The Theory of Buyer Behavior*. Wiley, New York.

Insurance Research Council. 1999. Public Attitude Monitor 1999. *Vehicle Safety Issues,* Vol. 4, available from Insurance Research Council, American Institute for Chartered Property Casualty Underwriters, 718 Providence Road, P.O. Box 3025, Malvern, PA 19355-0725, telephone 610-644-2212, www.ircweb.org.

Isenberg, D. 1986. Group Polarization: A Critical Review and Meta-Analysis. *Journal of Personality and Social Psychology,* Vol. 50, pp. 1141–1151.

Levin, I.P., S.L. Schneider, and G.J. Gaeth. 1998. All Frames Are Not Created Equal: A Typology of Framing Effects. *Organizational Behavior and Human Decision Processes,* Vol. 76, pp. 149–188.

Macaluso, N. 2001. Car Dealers Look For an Online Jump Start. *E-Commerce Times,* July 23. www.ecommercetimes.com/perl/story/12189.html.

Merton, R.K. 1987. The Focused Interview and Focus Groups: Continuities and Discontinuities. *Public Opinion Quarterly,* Vol. 51, pp. 550–556.

Merton R.K., and P.L. Kendall. 1946. The Focused Interview, *American Journal of Sociology,* Vol. 51, pp. 541–557.

Merton, R.K., M. Fiske, and P.L. Kendall. 1956. *The Focused Interview: A Manual of Problems and Procedures.* The Free Press, Glencoe, Ill.

Merton, R.K., M. Fiske, and P.L. Kendall. 1990. *The Focused Interview: A Manual of Problems and Procedures.* 2nd ed. The Free Press, New York.

Miller, G. 1956. The Magical Number Seven, Plus or Minus Two: Some Limits on Our Capacity for Processing Information. *The Psychological Review,* Vol. 63, pp. 81–97.

Morgan, M.G., B. Fischhoff, A. Bostrom, and C. Atman. 2001. *Risk Communication: A Mental Models Approach.* Cambridge University Press, Cambridge, U.K.

Mudd, S.A., and R. Karsh. 1961. Design of a Picture Language to Identify Vehicle Controls: I General Methodology; II Investigation of Population Stereotypes. Technical Memorandum 22–61, U.S. Army Human Engineering Laboratory, Aberdeen Proving Ground, Md.

Myers, D., and H. Lamm. 1976. The Group Polarization Phenomenon. *Psychological Bulletin,* Vol. 83, pp. 602–627.

Nancy Low and Associates, Inc. 1996. Final Report on Focus Group Study of Rollover Research. Chevy Chase, Md.

Nicosia, F.M. 1966. *Consumer Decision Processes: Marketing and Advertising Implications.* Prentice-Hall, Engelwood Cliffs, N.J.

Plous, S. 1993. *The Psychology of Judgment and Decision Making.* McGraw-Hill, N.Y.

Schriver, K.A. 1996. *Dynamics in Document Design: Creating Text for Readers.* John Wiley & Sons.

Simonson, I., Z. Carmon, R. Dhar, A. Drolet, and S.M. Nowlis. 2001. Consumer Research: In Search of Identity. *Annual Review of Psychology,* Vol. 52, pp. 249–275.

TRB. 1996. *Special Report 248: Shopping for Safety: Providing Consumer Automotive Safety Information*. National Research Council, Washington, D.C.

University of Michigan. 2001. *Contribution of the Automotive Industry to the U.S. Economy in 1998: The Nation and Its Fifty States*. Prepared for the Alliance of Automobile Manufacturers, Inc., and the Association of International Automobile Manufacturers, Inc., by Institute of Labor and Industrial Relations, University of Michigan; Office for the Study of Automotive Transportation, University of Michigan Transportation Research Institute; and Center for Automotive Research, Environmental Research Institute of Mich.

Whyte, G. 1993. Escalating Commitment in Individual and Group Decision Making: A Prospect Theory Approach. *Organizational Behavior and Human Decision Processes,* Vol. 54, pp. 430–455.

Wogalter, S.M., V.C. Conzola, and W.J. Vigilante, Jr. 1999. Applying Usability Engineering Principles to the Design and Testing of Warning Messages. *Proc., 43rd Annual Meeting of the Human Factors and Ergonomics Society,* pp. 921–925.

Zeidler, F. 2001. *Problems in Defining Safety and Consequences for Consumer Information*. Safety Rating Advisory Committee.

5

Summary, Major Findings, and Recommendations for a Future Approach

The National Highway Traffic Safety Administration (NHTSA) has developed a five-star rating system for the rollover resistance of passenger cars, vans, pickup trucks, and sport utility vehicles (SUVs). The ratings for many 2001 and 2002 model year vehicles are available to the public as part of the agency's New Car Assessment Program (NCAP). The cornerstone of this rollover resistance rating system is a vehicle's static stability factor (SSF), defined as its track width, *T,* divided by twice its center of gravity height, *H.*

The congressional mandate for this study requested

- A determination of "whether the static stability factor is a scientifically valid measurement that presents practical, useful information to the public"; and
- A comparison of "the static stability factor test versus a test with rollover metrics based on dynamic driving conditions that may induce rollover events."

The committee's findings regarding SSF and NHTSA's star ratings for rollover resistance are presented below, following some brief remarks designed to place this study in the broader context of road safety and automobile crashes in general. The chapter concludes with the committee's recommendations to NHTSA for a future approach to the development of consumer information on motor vehicle rollover.

CONTEXT

Rollovers, like all automobile crashes, are complex events. Three main factors, and interactions among them, contribute to a crash: the driver, the driving environment, and the vehicle. Changes in all three of these factors have the potential to reduce the numbers of deaths and injuries resulting from rollover crashes. For example, NHTSA estimates that belted occupants are about 75 percent less likely than unbelted occupants to be killed in a rollover crash. Thus, a change in driver behavior leading to increased seat belt use could be effective in reducing rollover-related fatalities. Similarly, design improvements in both the roadside and roadside structures have the potential to reduce the likelihood of rollover when a vehicle leaves the roadway, particularly in a rural

environment. In accordance with its congressional mandate, this study focuses on the role of the vehicle in rollover crashes, and on the development and use of related consumer information.

Many complex risk trade-offs need to be considered in pursuing the ultimate goal of improved road safety, and the findings and recommendations of this report should be viewed in that broader context. The strategy of isolating and addressing specific safety problems can be effective in reducing the occurrence of associated deaths and injuries. This point is illustrated by the NCAP crashworthiness ratings: far fewer vehicles have exceeded the injury reference values since NHTSA began its frontal-crash NCAP program in 1979 (Ferguson 1999). At the same time, it is important to ensure that changes leading to a reduction in one contributor to overall vehicle risk, such as rollover, do not compromise other aspects of vehicle safety. Experience indicates that motor vehicle safety ratings give manufacturers a powerful incentive to design safer vehicles. Therefore, it is essential for NHTSA to avoid unintended—and detrimental—consequences in establishing rating system targets. Design changes that result in a higher rating for one vehicle feature, such as rollover resistance, should not be achieved at the expense of introducing other vehicle attributes that actually make the vehicle less safe overall. The many and complex trade-offs inherent in the vehicle design process make it particularly challenging to achieve overall vehicle safety improvements. Nevertheless, experience with crash ratings indicates that it is possible for vehicles to achieve uniformly good ratings across different categories.

STATIC STABILITY FACTOR

Relevance to Rollover

As noted, a vehicle's SSF is directly determined by two vehicle parameters: the track width, T, and the center of gravity height, H. The SSF metric is based on a rigid-body model of a vehicle sliding laterally on a surface. For such a model, the point of incipient rollover occurs when the sum of the lateral forces divided by the weight of the vehicle, W, is greater than the SSF:

$$\text{sum of lateral forces}/W > \text{SSF } (= T/2H) \tag{1}$$

For a vehicle to roll over, the lateral forces must be sustained for a sufficient period of time.[1]

The mechanism of lateral force generation is sometimes categorized as either tripped or untripped. Relationship 1 does not distinguish between tripped rollover resulting from forces generated by a mechanical obstacle, such as a

[1] Simulation of time-dependent rollover requires a much more complex model.

curb or a furrow plowed during an off-road maneuver, and untripped rollover resulting from forces generated by the tire–road interface friction on a smooth roadway. The physics governing the motion of vehicles shows that it is the magnitude and duration of the lateral forces on the vehicle that determine whether rollover occurs. Therefore, the present report does not distinguish between tripped and untripped rollovers.

For a real vehicle—as opposed to a rigid-body model—the simple rollover scenario is modified by such effects as tire deflections and the vehicle's rolling on its suspensions. As a consequence of these effects, vehicles roll over when the sum of the lateral forces is lower than predicted by the rigid-body model. Nevertheless, SSF is valuable in providing a clearly defined upper limit; if the sustained lateral forces on the tires exceed the limit derived from SSF for a sufficient time, rollover occurs.

An important question is whether the upper limit derived from SSF has significant meaning for vehicles in potential crash scenarios. A rollover crash can be described in terms of a sequence that passes from normal driving conditions, through a transitional loss-of-control region, and then to the out-of-control region and rollover. Current understanding of vehicle dynamics indicates that, following initiation of such a rollover sequence, vehicle behavior as the driver loses control is determined by many vehicle design parameters that affect handling (e.g., steering response, brake and suspension characteristics, track width, tire characteristics),[2] as well as by driver control inputs (steering, throttle, braking). Once the vehicle has reached the point of incipient rollover, however, static metrics—such as SSF—and the terrain are the dominant factors in determining whether rollover will occur.

Finding 1: Through a rigid-body model, SSF relates a vehicle's track width, *T,* and center of gravity height, *H,* to a clearly defined level of the sustained lateral acceleration that will result in the vehicle's rolling over. The rigid-body model is based on the laws of physics and captures important vehicle characteristics related to rollover.

Correlation with Crash Data

Statistical analysis of crash data is a potentially useful method of identifying trends in motor vehicle crashes. A strong statistical correlation between two events, or parameters, does not necessarily imply the existence of a corresponding causal relationship. However, if an understanding of physics and vehicle dynamics indicates that SSF is an important factor in rollovers, investigation of the statistical relationship between SSF and the observed rollover

[2] Vehicle behavior during the loss-of-control phase of a crash is influenced by many more parameters than the two that determine SSF (center of gravity height and track width).

rate may be helpful in assessing the influence of SSF on the outcome of actual crashes.

Statistical relationships derived from crash data are useful in identifying trends. NHTSA has generated a rollover curve showing the variation in rollover probability in the event of a single-vehicle crash[3] as a function of SSF for a number of vehicle makes and models. This curve portrays trends in the relationship between rollover probability and SSF. However, a specific data point representing the rollover risk of a particular vehicle may fall above or below the rollover curve, which represents the average of the data.

On the basis of its discussions with road safety experts and its review of the technical literature, the committee determined that scenarios—characterized in this report by particular combinations of driver and environmental variables—are important when considering rollover. The crash record of a particular vehicle model depends on driver behavior, the driving environments in which the vehicle is used, and the vehicle itself. In assessing the rollover propensity of a vehicle, scenario effects need to be considered when determining the influence of the factor under investigation—in this case, SSF.

In developing its rating system, NHTSA undertook statistical studies to investigate the relationship between measured values of SSF for a range of vehicles and corresponding rollover rates determined from crash data. The agency reviewed crash frequencies and rollover rates for several states; for modeling purposes, it used data from six states, selected as representative of national trends. At the request of the committee, NHTSA used a logit model to calculate additional rollover curves for individual crash scenarios. Each curve shows the probability of rollover in the event of a single-vehicle crash as a function of SSF for a specific scenario. Each scenario is defined by a unique combination of selected precrash and at-crash factors likely to affect the crash outcome. Data from single-vehicle crashes indicate that the following factors increase the risk of rollover: (1) male driver, (2) driver under 25 years of age, (3) drinking or illegal drug use by the driver, (4) speed limit 50 mph or greater, (5) crash occurs in a rural area, and (6) crash occurs on a curve.

The results of the NHTSA analyses indicate that the number of rollovers per single-vehicle crash decreases monotonically with increasing SSF for higher-risk scenarios, with some variations in the shape of the curve for different scenarios. The confidence bands for these curves are relatively narrow. Therefore, when known risk factors such as young male driver, driver drinking, excessive speed, and driving in a rural area are taken into account, the effect of SSF on the occurrence of rollover is statistically significant. The rollover curves for low-risk scenarios also show a decrease in rollover probability

[3] For the purposes of NHTSA's analyses of crash data, rollover risk is defined as the probability of rollover in the event of a single-vehicle crash.

with increasing SSF. Because of the small numbers of single-vehicle crashes for these scenarios, however, the confidence bands at lower SSF values are wide, indicating that the observed trends in rollover probability are not statistically significant.

Finding 2: Analysis of crash data reveals that, for higher-risk scenarios, SSF correlates significantly with a vehicle's involvement in single-vehicle rollovers, although driver behavior and driving environment also contribute. For these scenarios, the statistical trends in crash data and the underlying physics of rollover provide consistent insight: an increase in SSF reduces the likelihood of rollover.

In developing its star ratings for rollover resistance, NHTSA used an average scenario that was assumed to apply to all drivers. Although this approach ignores the subtleties of different scenarios and associated risks, it enabled the agency to develop a relatively simple rating system. Without a better understanding of consumer beliefs about the causes of rollover and empirical data on consumers' use of NHTSA's current rollover information, the committee is not in a position to comment on the value (if any) of scenario-specific rollover information in reducing overall rollover rates.

Static Measures and Dynamic Testing

As part of its charge, the committee was asked to compare "the static stability factor test versus a test with rollover metrics based on dynamic driving conditions that may induce rollover events." SSF provides important information on a vehicle's rollover propensity in the final phase of a crash. A vehicle's crash-avoidance characteristics are determined by more than 20 vehicle design parameters—including track width, T, and center of gravity height, H—that affect handling. It is these characteristics, together with driver inputs (steering, throttle, brake), that largely determine whether a driver can regain control of the vehicle after hitting a curb or making a rapid maneuver to avoid an obstacle. Thus static metrics—such as SSF—and dynamic tests are complementary, and both are needed to investigate a rollover crash in its entirety, from initiation to final outcome. Some manufacturers now offer electronic stability control systems that attempt to stabilize a vehicle in the early stages of loss of control. The merit of such systems lies in preventing a vehicle from entering into a situation that can lead to incipient rollover.

Finding 3: Metrics derived from dynamic testing are needed to complement static measures, such as SSF, by providing information about vehicle handling characteristics that are important in determining whether a driver can avoid conditions leading to rollover.

In response to the requirements of the Transportation Recall, Enhancement, Accountability, and Documentation (TREAD) Act of 2000 (Public Law 106-414), NHTSA is conducting research to develop a dynamic test relevant to the rollover of light motor vehicles for a consumer information program. Development of such a test is challenging because the relevant driving maneuvers involve testing near the limits of vehicle performance. Consequently, the results obtained may depend on the particular test scenario.

In summary, the committee found that SSF captures important vehicle characteristics related to rollover propensity and is strongly correlated with the outcome of actual crashes (rollover versus no rollover), as demonstrated by statistical analyses of crash data. Data from dynamic testing could provide important information on vehicle crash-avoidance metrics that would complement static measures.

NHTSA's STAR RATINGS FOR ROLLOVER RESISTANCE

Derivation of the Rating System

NHTSA derived its star ratings for rollover resistance using an exponential statistical model[4] and regression analysis correlating SSF with crash data. These crash data are binary; in other words, only two possible outcomes of a crash are of interest—the vehicle rolls over, or it does not. An exponential model is seldom used for analyzing binary data; regression analysis using a logit model is a more appropriate method. In response to a comment to this effect from the Alliance of Automobile Manufacturers, NHTSA recalculated the rollover curve using logistic regression, and found the rollover curves based on the exponential and logit models to be similar (*Federal Register* 2001a). The agency subsequently decided to base its rollover resistance ratings on its original exponential model. NHTSA did not investigate the relative usefulness and predictive capabilities of the two statistical models by calculating the associated confidence intervals.

At the committee's request, NHTSA calculated the 95 percent confidence intervals for the exponential model used to derive the rating system.[5,6] These confidence bands appear to indicate that the uncertainty associated with the estimates is too large to permit unambiguous allocation of a vehicle to a specific rating category. However, the committee's investigations revealed

[4] NHTSA refers to this as a linear model.

[5] Exponent Failure Analysis Associates, Inc. obtained very similar 95 percent confidence intervals for the linear model (Donelson and Ray 2001).

[6] A difficulty of statistical interpretation arises with the confidence intervals calculated for the linear regression model. The calculation method assumes that the basic dependent variable is continuous, whereas the underlying data are in fact binary (rollover or no rollover).

that these confidence intervals are based on a statistical analysis that does not appropriately consider the richness of the dataset. In this report, no attempt is made to rectify this situation, and the crash data used for the present analysis have been processed by NHTSA using a logit model. The results of the logit analysis, illustrated in Figure 5-1, show that the 95 percent confidence bands associated with the rollover curve are very narrow. Therefore, the logit model accurately estimates the average rollover curve.

NHTSA's decision to develop a five-star rating system for rollover resistance was based in part on the desire to use a ranking system that was already familiar to consumers through the NCAP ratings for crashworthiness. The estimated rollover curve based on the exponential model was approximated by five discrete levels corresponding to the five rating categories. This is a coarse approximation that results in a substantial loss of information, particularly at lower SSF values, where the rollover curve is relatively steep. The choice of breakpoints for the rating system does not exploit the richness of the available crash data, and as a result the system is not as helpful as it could be for consumers.

It is possible, for example, for one vehicle to have a slightly higher SSF than another, but to receive two stars instead of one. With only five rating categories spread across the range of interest, this difference appears highly

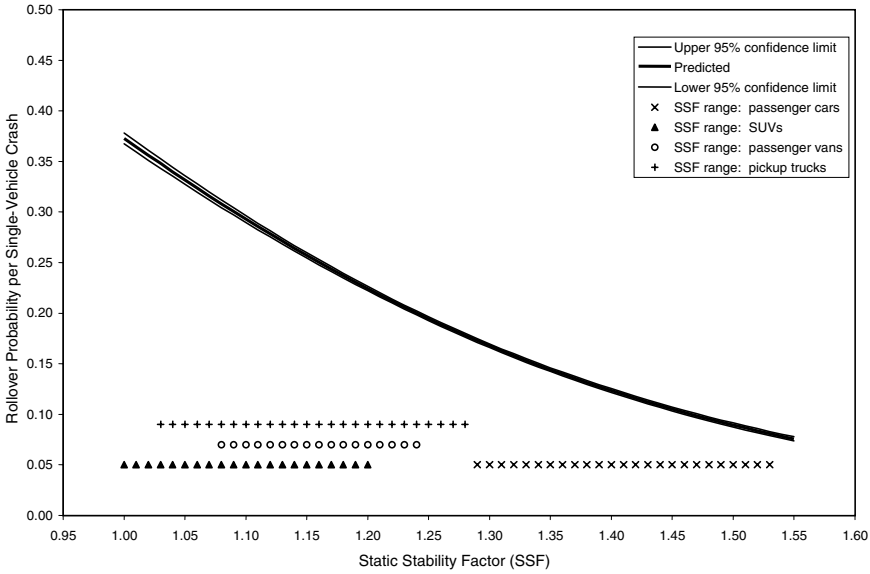

FIGURE 5-1 Estimated probability of rollover and 95 percent confidence intervals based on maximum-likelihood estimation of a logit model using the data from six states combined (*n* = 206,822).

significant. Furthermore, there can be an important difference in SSF—and associated rollover propensity—between two vehicles with the same star rating. Having more categories would provide greater resolution so that some of these problems could be avoided. Thus the difference between one and two stars would be smaller than it is with five categories. The result would be a more accurate representation of the underlying physics: on average, a vehicle with a slightly higher SSF than another has only a slightly higher rollover resistance. In addition, there would be less variation in SSF within a rating category than in the five-category case, so the grouping of vehicles would potentially be more useful to a consumer seeking to make meaningful distinctions among vehicles, particularly within a given vehicle class.[7,8] Alternatively, the use of discrete rating categories could be avoided altogether by ranking the rollover propensity of vehicles on a continuous scale, for example, 0–100.

Finding 4: NHTSA's implementation of an exponential statistical model lacks the confidence levels needed to permit discrimination among vehicles within a vehicle class with regard to differences in rollover risk.

Finding 5: The relationship between rollover risk and SSF can be estimated accurately with available crash data and software using a logit model. For the analysis of rollover crash data, this model is more appropriate than an exponential model.

Finding 6: The approximation of the average rollover curve with five discrete levels—corresponding to the five rating categories—is coarse and does not adequately convey the information provided by the available crash data, particularly at lower SSF values, where the rollover curve is relatively steep.

Presenting Information to the Consumer

Several recent studies have shown that vehicle safety is a significant consideration for consumers when buying a new car (see, for example, Insurance Research Council 1999). In response to this consumer focus on motor vehicle safety, NHTSA established its Consumer Automotive Safety Division in

[7] Increasing the number of categories does not alter the fact that, with a discrete approximation, there will always be a few borderline vehicles at the very top of one category or the very bottom of the next-highest category.

[8] Increasing the number of categories could make the rating system more difficult for some consumers to use. Visual representations, such as stars, must be counted once they surpass people's capacity to perceive at a glance the number of items presented (the limit is three to four items; see, e.g., Kaufman et al. 1949; cf. Peterson and Simon 2000). Numerical scores pose different problems. Research by Hibbard and colleagues (in press), for example, shows that use of visual clues (e.g., a three-star rating system) makes it easier for decision makers to process evaluative information and integrate it into their choices.

1997, with the specific objectives of developing and disseminating consumer safety materials.

The rollover information on NHTSA's website has attracted interest, as indicated by site use statistics. The site provides a list of the rollover resistance ratings for a range of vehicles, together with some brief explanatory material on how the ratings were derived. It also addresses the role of driver behavior in rollover crashes and highlights the importance of wearing a seat belt. The answers to frequently asked questions about the ratings note that even a five-star vehicle is not immune from rollover and also warn consumers that any load placed on the roof will be above the center of gravity of the vehicle, thereby increasing the likelihood of rolling over. The list of ratings indicates which vehicles are equipped with electronic stability control, and the accompanying text notes that this feature "may reduce the likelihood of a single vehicle crash, and thus, the risk of subsequent rollover." One of the objectives of dynamic testing is to assess the effectiveness of electronic stability control systems in helping a driver avoid conditions leading to rollover.[9]

The rollover resistance ratings for individual vehicles represent an attempt to provide relevant information about a complex risk in a concise summary measure. It is no easy task to develop a good summary measure that is meaningful, easy to understand and interpret, and unambiguous, and that places the information in the appropriate context and conveys uncertainty. A conclusive assessment of the effectiveness of any such measure requires analysis of empirical data on consumers' use of the information. The committee was unable to obtain any such data to inform its assessment of the practicality and usefulness of the rollover resistance ratings. Therefore, its findings in this area are based on extrapolation from research on other consumer products, judgment, and evaluation of the process used by NHTSA to develop the ratings.

Research on consumer information and decision making, risk communication, and hazard warnings and labels has resulted in recommended practices that are helpful in developing a range of consumer information. Following these practices does not guarantee that the resulting information will be effective, but it does provide some degree of confidence. NHTSA made only limited use of such practices in developing its rollover resistance rating system. The committee identified three areas of concern in NHTSA's approach: (1) the use of a single research strategy—namely, focus groups—rather than a range of techniques, including one-on-one interviews, open-ended group interviews, and written questionnaires; (2) failure to use an iterative design process to test, refine, and retest the proposed consumer information; and (3) the lack of large-scale formal testing before dissemination to determine whether consumers are able to apply the information appropriately.

[9] The example of antilock brakes indicates that caution is needed in extrapolating the results of track testing to real-world experience.

The deficiencies in NHTSA's approach do not necessarily mean that the rollover resistance ratings are not an effective communication tool. Nevertheless, these deficiencies raise concerns that cannot be dismissed easily in the absence of relevant empirical data on consumer responses to the ratings. A further concern is the superficial resemblance between the rollover resistance ratings and the NCAP frontal and side crash ratings. Both use a star system, with five stars indicating the best vehicle performance and one the worst. However, the crash ratings are based on crash tests and provide information about a vehicle's crashworthiness, whereas the rollover ratings relate to crash propensity given that the vehicle is already in a single-vehicle crash—a very different concept. Empirical data on consumers' use of the NCAP information are needed to investigate this possible source of confusion, as well as use of the ratings in the context of other automotive safety information.

Finding 7: There is a gap between recommended practices for the development of safety information and NHTSA's current process for identifying and meeting consumer needs for such information. In particular:

- **The focus group studies used to develop the star rating system were limited in scope.**
- **The agency has not undertaken empirical studies to evaluate consumers' use of the rollover resistance rating system in making vehicle safety judgments or purchase decisions.**

In summary, the committee found that NHTSA's star ratings for rollover resistance are likely to be of limited use in presenting practical information to the public because:

- There were shortcomings in the statistical methodology used to derive the average rollover curve.
- The approximation of the rollover curve by five discrete rating categories is coarse and does not adequately convey the degree of resolution among vehicles provided by available crash data.
- The limited procedures used by NHTSA to develop and evaluate the star rating system do not demonstrate with reasonable confidence the likely effectiveness of the system.

RECOMMENDATIONS FOR A FUTURE APPROACH

The committee concludes that consumer information on motor vehicle rollover can assist the public in choosing safer cars and encourage manufacturers to in-

vestigate ways of making their vehicles less susceptible to rollover. To be comprehensive, such information needs to capture:

- The results of dynamic tests that assess a vehicle's control and handling characteristics, and
- Information from static measures indicative of a vehicle's rollover propensity.

In accordance with the requirements of the TREAD Act, NHTSA is investigating driving maneuver tests for rollover resistance and has reported progress in this activity (*Federal Register* 2001b). Challenges remain in developing the requisite dynamic tests, together with related consumer information that is technically accurate, as well as practical and useful to the public. Nevertheless, the committee has not identified any insurmountable engineering barriers to the development of a representative dynamic test (or tests) that would differentiate meaningfully among vehicles. Similarly, the development of consumer information based on static measures and dynamic tests appears feasible, particularly if NHTSA takes advantage of recommended development practices and proven techniques for communicating risk-based information to consumers.

Despite the absence of technical barriers to providing more comprehensive consumer information on rollover, the protracted history of NHTSA's rulemaking initiatives on rollover (see Chapter 1) suggests that the agency may encounter difficulties in obtaining support for its actions from all the major stakeholders. Furthermore, vehicle manufacturers, consumer groups, and others involved in vehicle testing are likely to incur additional costs when NHTSA introduces dynamic test(s) relating to rollover (see Chapter 2). For these reasons, the committee concludes that consumer information on rollover that captures both static measures and dynamic test results probably will not be available in the near future.

The current rollover resistance ratings are likely to be of limited use to the public because of the way in which information on SSF is delivered. However, SSF may form a reasonable initial basis for developing consumer information on rollover until additional measures based on both static metrics and dynamic testing[10] become available.

Recommendation 1: NHTSA should vigorously pursue its ongoing research on driving maneuver tests for rollover resistance, mandated under the TREAD Act, with the objective of developing one or more dynamic tests that can be used to assess transient vehicle behavior leading to rollover.

[10] In the absence of empirical evaluations of consumers' use of dynamic test information, the committee is unable to assess whether such information can be interpreted and used by the public in vehicle purchase decisions.

Recommendation 2: In the longer term, NHTSA should develop revised consumer information on rollover that incorporates the results of one or more dynamic tests on transient vehicle behavior to complement the information from static measures, such as SSF.

Recommendation 3: NHTSA should investigate alternative options for communicating information to the public on SSF and its relationship to rollover. In developing revised consumer information, NHTSA should

- **Use a logit model as a starting point for analysis of the relationship between rollover risk and SSF.**
- **Consider a higher-resolution representation of the relationship between rollover risk and SSF than is provided by the current five-star rating system.**
- **Continue to investigate presentation metrics other than stars.**
- **Provide consumers with more information placing rollover risk in the broader context of motor vehicle safety.**

REFERENCES

Donelson, A.C., and R.M. Ray. 2001. *Motor Vehicle Rollover Ratings: Toward a Resolution of Statistical Issues.* Report prepared for the Alliance of Automobile Manufacturers by Exponent Failure Analysis Associates, Inc., Menlo Park, Calif.

Federal Register. 2001a. Consumer Information Regulations; Federal Motor Vehicle Safety Standards; Rollover Resistance; Final Rule. Vol. 66, No. 9, Jan. 12, pp. 3,388–3,437.

Federal Register. 2001b. Consumer Information Regulations; Federal Motor Vehicle Safety Standards; Rollover Prevention; Request for Comments. Vol. 66, No. 128, July 3, pp. 35,179–35,193.

Ferguson, S.A. 1999. Consumer Demand. *Recovery,* Vol. 10, pp. 11–13.

Hibbard, J.H., P. Slovic, E. Peters, and M.L. Finucane (in press). *Strategies for Reporting Health Plan Performance Information to Consumers: Evidence from Controlled Studies.* Health Services Research.

Insurance Research Council. 1999. *Public Attitude Monitor 1999: Vehicle Safety Issues.*

Kaufman, E., M. Lord, T. Reese, and J. Volkmann. 1949. The Discrimination of Visual Number. *American Journal of Psychology,* Vol. 62, pp. 498–525.

Peterson, S.A., and T.J. Simon. 2000. Computational Evidence for the Subitizing Phenomenon as an Emergent Property of the Human Cognitive Architecture. *Cognitive Science,* Vol. 24, No. 1, Jan.–Mar., pp. 93–122.

APPENDIX A
Congressional Request for Study

NATIONAL HIGHWAY TRAFFIC SAFETY ADMINISTRATION[1]

Operations and Research

...Provided further, That the Department of Transportation shall fund a study with the National Academy of Sciences on whether the static stability factor is a scientifically valid measurement that presents practical, useful information to the public including a comparison of the static stability factor test versus a test with rollover metrics based on dynamic driving conditions that may induce rollover events: Provided further, That nothing in this provision prohibits NHTSA from completing action on its proposal to provide rollover rating information to the public while the National Academy of Sciences conducts this study: Provided further, That to the extent NHTSA continues action on its rollover ratings proposal during the study, the agency shall consider any available preliminary deliberations or conclusions available from the National Academy of Sciences before completing action on its proposal, and shall consider coordinating any final action on its proposal with the completion of the National Academy of Sciences study: Provided further, That the National Academy of Sciences shall complete this study and issue a report to the House and Senate Committees on Appropriations not later than nine months after the date of enactment of this Act: Provided further, That after the National Academy of Sciences submits its findings to the Congress and the National Highway Traffic Safety Administration, the National Highway Traffic Safety Administration shall formally review and respond within 30 days to the study findings and propose any appropriate revisions to the consumer information program based on that review.

[1] Text taken from conference report on H.R. 4475, Department of Transportation and Related Agencies Appropriations Act, 2001 (House Rept. 106–940).

APPENDIX B
Committee Meetings and Other Activities

FIRST COMMITTEE MEETING:
APRIL 11–12, 2001, WASHINGTON, D.C.

The following presentations were made to the committee by invited speakers:

Light Vehicle Rollover: Background on NHTSA's Activities in this Area
Steve Kratzke, *National Highway Traffic Safety Administration (NHTSA)*

Background to NHTSA NCAP Ratings for Rollover Resistance: Why Are They Based on Static Stability Factor?
Pat Boyd, *NHTSA*

Analysis of Real-World Data: Static Stability Factor and the Risk of Rollover
Sue Partyka, *NHTSA*

Presentation on Behalf of the Alliance of Automobile Manufacturers
Alan Donelson, *Exponent Failure Analysis Associates, Inc.*

Consumer Information Program for Rollover
Roger Kurrus, *NHTSA,* and Mary Versailles, *NHTSA*

Comments on Consumer Information Issues
R. David Pittle, *Consumers Union*

Rollover Consumer Information: Three Phases of Rollover
Rob Strassburger, *Alliance of Automobile Manufacturers*

Shopping for Safety: Summary of an NRC–TRB Committee Report on Providing Consumer Automotive Safety Information
M. Granger Morgan, *Carnegie Mellon University*

Recent NHTSA Dynamic Rollover Testing Experience
W. Riley Garrott, *NHTSA*

Suggestions for Approaches To Assess Vehicle Rollover Resistance
David Champion, *Consumers Union*

The following speakers addressed the committee during the open discussion:

- Michael Cammisa, Association of International Automobile Manufacturers, Inc.;
- Barry Felrice, DaimlerChrysler Corporation;
- Doug Greenhaus, National Automobile Dealers Association; and
- Ian Jones, Consultant, Great Falls, Va.

SECOND COMMITTEE MEETING: MAY 29–30, 2001, WASHINGTON, D.C.

The following presentations were made to the committee by invited speakers:

Aberdeen Test Center Roadway Simulator
Greg Schultz, *U.S. Army Aberdeen Test Center,* and Carl Larsen, *MTS Systems Corporation*

Collection of NASS CDS Data Relating to Rollover
Robert Woodill, *Veridian Engineering,* and John Brophy, *NHTSA*

Communicating Risk-Based Information to the Consumer
Michael S. Wogalter, *North Carolina State University*

The following speakers addressed the committee during the open discussion:

- Wade Allen, Systems Technology, Inc.;
- George Ball, Graeme Fowler, and Jerry Hashimura, American Suzuki Motor Corporation;
- Joan Claybrook, Public Citizen;
- Clarence Ditlow, Center for Auto Safety;
- Phil Headley, Continental Teves;
- Ian Jones, Consultant, Great Falls, Va.;
- Jeya Padmanaban, JP Research;
- R. David Pittle, Consumers Union; and
- Tab Turner, Turner & Associates.

SITE VISITS

Visit to Consumers Union Vehicle Test Facility, East Haddam, Conn., June 21, 2001.

Site Visits to Ford Motor Company, Dearborn, Mich.; General Motors Proving Ground, Milford, Mich.; and DaimlerChrysler Proving Ground, Chelsea, Mich.; July 24–25, 2001.

THIRD COMMITTEE MEETING: JULY 25–26, 2001, DEARBORN, MICH.

FOURTH COMMITTEE MEETING: OCTOBER 30–31, 2001, WASHINGTON, D.C.

ADDITIONAL DATA GATHERING

In addition to material presented to the committee during the information-gathering meetings listed above, a number of organizations and individuals provided written submissions for the committee's consideration. A list of all nonproprietary materials considered by the committee is available from the Public Records Office of the National Academies (e-mail: publicac@nas.edu).

Appendix C
Supplementary Statistical Results

Tables C-1 through C-7 present the outcomes of the LOGISTIC procedure using the Statistical Analysis System (SAS).[1] Listed are:

- The name of each parameter included in the model;
- The degrees of freedom (DF) associated with each parameter;
- The estimated coefficient of the parameter, obtained by maximum-likelihood estimation;
- The standard error of the coefficient (a measure of precision);
- The Wald Chi-square statistic, computed as the square of the value obtained by dividing the parameter estimate by its standard error; and
- The *p*-value (Pr > ChiSq) for the Wald Chi-square statistic with 1 DF, with a value below 0.05 indicating a significant effect of the associated model parameter if a 5 percent significance level is chosen.

The parameters included in the logistic model are the static stability factor (SSF) and the five "dummy" state variables (i.e., 0,1 variables). Note that Missouri, the sixth state in the data, is omitted in the model; it is the baseline state in the model. For example, using the modeling results shown in Table C-1 and the notation of Equation 7 in Chapter 3, the logit model can be written as follows:

$$\log [P/(1-P)] = 1.5326 - 3.6027 \text{ SSF} + \text{adjustments}$$

where P is the estimated probability of a rollover given a single-vehicle crash, and the adjustments are as follows:

–0.1910	if STORM = 1 (+0 otherwise)
+0.9276	if FAST = 1 (+0 otherwise)
+0.1279	if HILL = 1 (+0 otherwise)
+0.5224	if CURVE = 1 (+0 otherwise)
–0.0913	if MALE = 1 (+0 otherwise)
+0.3187	if YOUNG = 1 (+0 otherwise)
–0.3664	if OLD = 1 (+0 otherwise)
+0.2578	if DRINK = 1 (+0 otherwise)

[1] The LOGISTIC Procedure. SAS Institute Inc. *SAS/STAT® User's Guide,* Version 6, Fourth Edition, Volume 2, SAS Institute Inc., Cary, N.C., 1989.

+1.1611	if State = Florida (+0 otherwise)
+0.7852	if State = Maryland (+0 otherwise)
+0.8006	if State = North Carolina (+0 otherwise)
+1.2121	if State = Pennsylvania (+0 otherwise)
+1.4575	if State = Utah (+0 otherwise)

TABLE C-1 Logit Model Results for Data from Six States Combined (See Figure 3-2)

Parameter	DF	Estimate	Standard Error	Wald Chi-Square	Pr > ChiSq
Intercept	1	1.5326	0.0555	762.6947	<.0001
SSF	**1**	**-3.6027**	**0.0416**	**7510.7110**	**<.0001**
STORM	1	-0.1910	0.0130	214.9444	<.0001
FAST	1	0.9276	0.0123	5642.4241	<.0001
HILL	1	0.1279	0.0124	106.9493	<.0001
CURVE	1	0.5224	0.0122	1844.5867	<.0001
MALE	1	-0.0913	0.0123	55.2705	<.0001
YOUNG	1	0.3187	0.0119	720.3518	<.0001
OLD	1	-0.3664	0.0405	81.6902	<.0001
DRINK	1	0.2578	0.0157	270.7577	<.0001
dummy_fl	1	1.1611	0.0214	2953.9104	<.0001
dummy_md	1	0.7852	0.0257	932.6290	<.0001
dummy_nc	1	0.8006	0.0192	1742.2279	<.0001
dummy_pa	1	1.2121	0.0200	3686.3054	<.0001
dummy_ut	1	1.4575	0.0296	2417.7396	<.0001

TABLE C-2 Logit Model Results for Data from Six States Combined for Risk Scenario Close to the Minimum (See Figure 3-3)

Parameter	DF	Estimate	Standard Error	Wald Chi-Square	Pr > ChiSq
Intercept	1	1.0804	2.8127	0.1476	0.7009
SSF	**1**	**-3.7387**	**2.0212**	**3.4216**	**0.0643**
dummy_fl	1	0.7377	0.7845	0.8842	0.3470
dummy_md	1	0.5256	1.0138	0.2688	0.6042
dummy_nc	1	0.5774	0.8119	0.5058	0.4770
dummy_pa	1	0.4725	0.8263	0.3270	0.5675
dummy_ut	1	1.9178	1.2993	2.1786	0.1399

TABLE C-3 Logit Model Results for Data from Six States Combined for Risk Scenario at the 25th Percentile (See Figure 3-4)

Parameter	DF	Estimate	Standard Error	Wald Chi-Square	Pr > ChiSq
Intercept	1	1.9149	0.3158	36.7562	<.0001
SSF	**1**	**-3.7359**	**0.2384**	**245.5733**	**<.0001**
dummy_fl	1	1.1069	0.1341	68.1204	<.0001
dummy_md	1	0.7083	0.1964	13.0090	0.0003
dummy_nc	1	0.7284	0.1494	23.7583	<.0001
dummy_pa	1	1.1200	0.1415	62.6115	<.0001
dummy_ut	1	1.0745	0.2143	25.1399	<.0001

TABLE C-4 Logit Model Results for Data from Six States Combined for Risk Scenario at the Mean (See Figure 3-5)

Parameter	DF	Estimate	Standard Error	Wald Chi-Square	Pr > ChiSq
Intercept	1	3.1380	0.3896	64.8641	<.0001
SSF	**1**	**-4.1671**	**0.3083**	**182.6660**	**<.0001**
dummy_fl	1	1.0949	0.1610	46.2240	<.0001
dummy_md	1	0.7980	0.1861	18.3786	<.0001
dummy_nc	1	0.4573	0.1555	8.6466	0.0033
dummy_pa	1	1.0435	0.1521	47.0791	<.0001
dummy_ut	1	1.3395	0.1965	46.4858	<.0001

TABLE C-5 Logit Model Results for Data from Six States Combined for Risk Scenario at the Median (See Figure 3-6)

Parameter	DF	Estimate	Standard Error	Wald Chi-Square	Pr > ChiSq
Intercept	1	2.8052	0.2493	126.5779	<.0001
SSF	**1**	**-3.9525**	**0.1990**	**394.5406**	**<.0001**
dummy_fl	1	1.4559	0.0895	264.3365	<.0001
dummy_md	1	0.6796	0.1198	32.1621	<.0001
dummy_nc	1	0.4733	0.0885	28.6180	<.0001
dummy_pa	1	0.9663	0.0978	97.6930	<.0001
dummy_ut	1	1.8160	0.1236	215.9163	<.0001

TABLE C-6 Logit Model Results for Data from Six States Combined for Risk Scenario at the 75th Percentile (See Figure 3-7)

Parameter	DF	Estimate	Standard Error	Wald Chi-Square	Pr > ChiSq
Intercept	1	4.1884	0.4747	77.8564	<.0001
SSF	**1**	**-4.9957**	**0.3954**	**159.5922**	**<.0001**
dummy_fl	1	0.7393	0.1901	15.1233	0.0001
dummy_md	1	0.8961	0.2166	17.1126	<.0001
dummy_nc	1	0.3376	0.1571	4.6142	0.0317
dummy_pa	1	1.2998	0.1448	80.5297	<.0001
dummy_ut	1	1.6824	0.2122	62.8738	<.0001

TABLE C-7 Logit Model Results for Data from Six States Combined for Risk Scenario Close to Maximum (See Figure 3-8)

Parameter	DF	Estimate	Standard Error	Wald Chi-Square	Pr > ChiSq
Intercept	1	0.7049	0.5683	1.5388	0.2148
SSF	**1**	**-1.7458**	**0.4509**	**14.9929**	**0.0001**
dummy_fl	1	1.5017	0.1989	56.9796	<.0001
dummy_md	1	0.3726	0.5993	0.3865	0.5342
dummy_nc	1	1.6822	0.1713	96.4075	<.0001
dummy_pa	1	0.7427	0.2205	11.3456	0.0008
dummy_ut	1	2.2298	0.4830	21.3100	<.0001

APPENDIX D
Rollover Information from NHTSA's Website

This appendix reprints information from the following documents on the National Highway Transportation Safety Administration's (NHTSA's) website:

- New Car Assessment Program (www.nhtsa.dot.gov/hot/rollover/2001Rollover.html);
- Rollover Rated Vehicle Details (www.nhtsa.dot.gov/hot/rollover/fullWebd.html); and
- Rollover Resistance Ratings Information (www.nhtsa.dot.gov/hot/rollover).

NEW CAR ASSESSMENT PROGRAM[1]

How To Use This Chart

Frontal and Side Crash Test Ratings

- In the frontal crash rating, vehicles are classified by the estimated chance of a life-threatening head and/or chest injury for the driver or front seat passenger.
- Frontal crash results should only be compared against other vehicles in the same weight class. If a light vehicle collides head-on with a heavier vehicle at 35 mph, the occupants in the lighter vehicle could experience a greater chance of injury than the results of this test indicate.
- In the side crash rating, vehicles are classified by the estimated chance of a life-threatening chest injury for the driver and the rear seat passenger. Head injury is not measured in the side crashes.
- Since all tested vehicles are impacted by the same size barrier, it is possible to compare vehicles from different weight classes when looking at side crash ratings.
- Drivers and passengers in both the frontal and side crash rating receive a one to five star rating with five stars ***** indicating the best protection.
- Vehicles are twice as likely to be involved in severe frontal crashes than in severe side crashes. Test results show the relative crash protection provided

[1] Text and data are from the September 2001 website posting.

to occupants using all of the vehicle's occupant protection equipment. Occupant protection equipment consists of safety belts and air bags. The results do not apply to unbelted occupants.

• All vehicles had safety belt systems for all occupants and frontal air bags for the driver and right front seat passenger. The side air bag equipment provided on each tested vehicle is shown to the right of the vehicle's overall score. The side air bag column refers to what was in the vehicle tested and not to options that might be available from the manufacturer.

• Also, thigh injury is measured in the frontal crash tests and pelvic injury is measured in the side crash tests. If a high likelihood of a thigh injury or a pelvic injury occurs, the consumer is informed of these possible injuries by an asterisk or a pound symbol respectively.

Rollover Resistance Ratings

• Most rollover crashes occur when a vehicle runs off the road and is tripped by a ditch, curb, soft soil, or other object causing it to rollover. These crashes are usually caused by driver behavior such as speeding or inattention. These are called single vehicle crashes because the crash did not involve a collision with another vehicle. More than 10,000 people die each year in all rollover crashes.

• The rollover resistance rating is an estimate of your risk of rolling over if you have a single vehicle crash. It does not predict the likelihood of that crash. The rollover resistance rating essentially measures vehicle characteristics of center of gravity and track width to determine how "top heavy" a vehicle is. The more top-heavy the vehicle, the more likely it is to roll over. The lowest-rated vehicles (1 star) are at least four times more likely to roll over than the highest rated vehicles (5 stars).

• The rollover resistance ratings of vehicles were compared with 220,000 actual single-vehicle crashes, and the ratings were found to relate very closely to the real-world rollover experience of vehicles.

• Like side crash ratings, it is possible to compare vehicles from different weight classes when looking at rollover resistance ratings.

• Some vehicles have electronic stability control, a device which does not affect the rollover resistance rating directly but may reduce the likelihood of a single vehicle crash, and thus, the risk of subsequent rollover. NHTSA notes vehicles equipped with electronic stability control by a symbol next to the rollover resistance ratings.

• While the rollover resistance rating does not directly predict the risk of injury or death, keep in mind that rollovers have a higher fatality rate than other kinds of crashes. *Remember: Even the highest-rated vehicle can rollover, but you can reduce your chance of being killed in a rollover by about 75 percent just by wearing your seat belt.*

New Car Assessment Program Ratings Chart

MAKE & MODEL		FRONTAL CRASH RATING		SIDE CRASH RATING		ROLLOVER RESISTANCE RATING	SIDE AIR BAG	
		DRIVER	PASSENGER	DRIVER	PASSENGER		FRONT	REAR
2001 Mini Passenger Cars (1500–1999 lbs. curb weight)								
HONDA INSIGHT 2DR	1868 lbs.	★★★★	★★★★	★★★★	NO SEAT	NOT RATED		
2001 Light Passenger Cars (2000–2499 lbs. curb weight)								
CHEVROLET PRIZM 4DR	2498 lbs.	★★★★	★★★★	★★★	★★★	★★★★		
CHEVROLET PRIZM 4DR	2498 lbs.	★★★★	★★★★	★★★★	★★★	★★★★	✓	
FORD ESCORT 4DR	2458 lbs.	★★★	★★★	★★★	★★★	NOT RATED		
HYUNDAI ACCENT 4DR	2412 lbs.	NOT TESTED	NOT TESTED	★★★	★★	★★★★		
KIA RIO 4DR	2308 lbs.	NOT TESTED	NOT TESTED	★★★	★★★	NOT RATED		
MAZDA MIATA 2CV	2385 lbs.	★★★★	★★★★★	★★★	NO SEAT	NOT RATED		
MAZDA PROTEGE 4DR	2484 lbs.	★★★★★	★★★★	★★★	★★★★	NOT RATED	✓	
SATURN SL 4DR	2332 lbs.	★★★★★	★★★★★	★★★	★★	★★★★		
TOYOTA COROLLA 4DR	2498 lbs.	★★★★	★★★★	★★★	★★★	★★★★		
TOYOTA COROLLA 4DR	2498 lbs.	★★★★	★★★★	★★★★	★★★	★★★★	✓	
TOYOTA ECHO 4DR	2160 lbs.	★★★★	★★★★	★★★	★★★★	★★★★		
2001 Compact Passenger Cars (2500–2999 lbs. curb weight)								
CHEVROLET CAVALIER 2DR	2708 lbs.	★★★	★★★★	★	★★	NOT RATED		
CHEVROLET CAVALIER 4DR	2750 lbs.	★★★★	★★★★	★#	★★★	★★★★		
DODGE NEON 4DR	2602 lbs.	★★★★	★★★★	★★★	★★★	★★★★		
FORD ESCORT ZX2 2DR	2541 lbs.	NOT TESTED	NOT TESTED	★	★★★★	NOT RATED		
FORD FOCUS 2DR	2646 lbs.	★★★★★	★★★★★	★★★★	★	NOT RATED		
FORD FOCUS 4DR	2701 lbs.	★★★★	★★★★	★★★	★★★★	★★★★¶		
HONDA CIVIC 2DR	2501 lbs.	★★★★★	★★★★★	★★★★★	★★★★★	NOT RATED	✓	
HONDA CIVIC 4DR	2522 lbs.	★★★★★	★★★★★	★★★★	★★★★	★★★★	✓	
HONDA CIVIC 4DR	2522 lbs.	★★★★★	★★★★★	★★★★	★★★★	★★★★		
HYUNDAI ELANTRA 4DR	2897 lbs.	★★★★	★★★★★	★★★★★	★★★★	NOT RATED	✓	
KIA SEPHIA 4DR	2592 lbs.	★★★★	★★★★★	★★★	★★★★	NOT RATED		
MAZDA 626 4DR	2802 lbs.	★★★★	★★★★★	★★★#	★★★	NOT RATED		

NISSAN SENTRA 4DR	2762 lbs.	★★★★	★★★★	NOT TESTED	NOT TESTED	NOT RATED	
PLYMOUTH NEON 4DR	2602 lbs.	★★★★	★★★★	★★★	★★★	★★★★	
PONTIAC SUNFIRE 2DR	2708 lbs.	★★★	★★★★	★	★★	NOT RATED	
PONTIAC SUNFIRE 4DR	2750 lbs.	★★★★	★★★★	★#	★★★	★★★★	
SATURN L SERIES 4DR	2943 lbs.	★★★★	★★★★★	★★	★★★★	NOT RATED	
TOYOTA CELICA 2DR	2526 lbs.	★★★★	★★★★	★★★	SEAT TOO SMALL	NOT RATED	
TOYOTA PRIUS 4DR	2760 lbs.	★★★	★★★★	NOT TESTED	NOT TESTED	NOT RATED	
VOLKSWAGEN BEETLE 2DR	2886 lbs.	★★★★	★★★★	★★★★★	★★★	NOT RATED	✓
VOLKSWAGEN GOLF 4DR	2934 lbs.	★★★★★	★★★★★	NOT TESTED	NOT TESTED	NOT RATED	✓
VOLKSWAGEN JETTA 4DR	2934 lbs.	★★★★★	★★★★★	★★★★	★★★★	★★★★	✓

NOTE: "seat too small" means the testing laboratory could not reasonably seat the crash test dummy in the rear seat.
High likelihood of pelvic injury.
¶ Electronic stability control is available as an option.

2001 Medium Passenger Cars (3000–3499 lbs. curb weight)

AUDI TT 2DR	3135 lbs.	NOT TESTED	NOT TESTED	★★★★★	NO SEAT	NOT RATED	
ACURA TL 4DR	3493 lbs.	★★★★	★★★★	★★★★	★★★★★	NOT RATED	✓
BUICK CENTURY 4DR	3359 lbs.	★★★★	★★★	★★★#	★★★	NOT RATED	✓
BUICK CENTURY 4DR	3359 lbs.	★★★★	★★★	★★★	★★★	NOT RATED	
BUICK REGAL 4DR	3359 lbs.	★★★★	★★★	★★★#	★★★	NOT RATED	✓
BUICK REGAL 4DR	3359 lbs.	★★★★	★★★	★★★	★★★	NOT RATED	
CHEVROLET CAMARO 2DR	3336 lbs.	★★★★	★★★★★	★★★	★★★★	NOT RATED	
CHEVROLET IMPALA 4DR	3446 lbs.	★★★★★	★★★★★	★★★★	★★★★	★★★★	✓
CHEVROLET IMPALA 4DR	3446 lbs.	★★★★★	★★★★★	★★★★	★★★★	★★★★	
CHEVROLET LUMINA 4DR	3367 lbs.	★★★★	★★★★★	★★★★	★★★	★★★★	
CHEVROLET MALIBU 4DR	3054 lbs.	★★★★	★★★★	★★	★★★★	NOT RATED	
CHEVROLET MONTE CARLO 2DR	3349 lbs.	★★★★★	★★★★★	★★★	★★★★	NOT RATED	
CHRYSLER CONCORDE 4DR	3471 lbs.	★★★★	★★★★	★★★★	★★★	NOT RATED	
CHRYSLER SEBRING 2DR	3084 lbs.	★★★★	★★★★	★★★	★★★★★	NOT RATED	
CHRYSLER SEBRING 2CV	3482 lbs.	★★★	★★★	★★★	★★★★	NOT RATED	
CHRYSLER SEBRING 4DR	3221 lbs.	★★★★★	★★★★★	★★★	★★★	★★★★★	
DAEWOO LEGANZA 4DR	3152 lbs.	★★★	★★★	★★★★	★★★#	NOT RATED	
DODGE INTREPID 4DR	3471 lbs.	★★★★	★★★★	★★★★	★★★	NOT RATED	

High likelihood of pelvic injury.

(*continued on next page*)

New Car Assessment Program Ratings Chart (*continued*)

MAKE & MODEL		FRONTAL CRASH RATING		SIDE CRASH RATING		ROLLOVER RESISTANCE RATING	SIDE AIR BAG	
		DRIVER	PASSENGER	DRIVER	PASSENGER		FRONT	REAR
2001 Medium Passenger Cars (3000–3499 lbs. curb weight) (*continued*)								
DODGE STRATUS 2DR	3084 lbs.	★★★★	★★★★	★★★	★★★★★	NOT RATED		
DODGE STRATUS 4DR	3221 lbs.	★★★★★	★★★★★	★★★	★★★	★★★★★		
FORD MUSTANG 2DR	3122 lbs.	★★★★★	★★★★★	★★★	★★★	NOT RATED		
FORD MUSTANG 2CV	3122 lbs	NOT TESTED	NOT TESTED	★★	★★★	NOT RATED		
FORD TAURUS 4DR	3393 lbs.	★★★★★	★★★★★	★★★	★★★	★★★★	✓	
FORD TAURUS 4DR	3393 lbs.	★★★★★	★★★★★	★★★	★★★	★★★★		
HONDA ACCORD 2DR	3053 lbs.	★★★★★	★★★★	★★★★	★★★★	NOT RATED	✓	
HONDA ACCORD 4DR	3078 lbs.	★★★★★	★★★★★	★★★★	★★★★★	★★★★★	✓	
HONDA ACCORD 4DR	3078 lbs.	★★★★★	★★★★★	★★★★	★★★★	★★★★★		
HYUNDAI SONATA 4DR	3154 lbs.	NOT TESTED	NOT TESTED	★★★★	★★★★★	NOT RATED	✓	
INFINITI I30 4DR	3233 lbs.	★★★★	★★★★	★★★★	★★★★	NOT RATED	✓	
LEXUS ES300 4DR	3344 lbs.	NOT TESTED	NOT TESTED	★★★★★	★★★★	NOT RATED	✓	
LEXUS IS300 4DR	3302 lbs.	★★★★	★★★★	★★★★★	★★★★★	NOT RATED	✓	
MAZDA MILLENIA 4DR	3372 lbs.	NOT TESTED	NOT TESTED	★★★★	★★★	NOT RATED	✓	
MERCURY COUGAR 2DR	3062 lbs.	NOT TESTED	NOT TESTED	★★★	★★★	NOT RATED		
MERCURY SABLE 4DR	3393 lbs.	★★★★★	★★★★★	★★★	★★★	★★★★¶		
MERCURY SABLE 4DR	3393 lbs.	★★★★★	★★★★★	★★★	★★★	★★★★¶	✓	
MITSUBISHI ECLIPSE 2DR	3209 lbs.	NOT TESTED	NOT TESTED	★★★★★	SEAT TOO SMALL	NOT RATED		
MITSUBISHI GALANT 4DR	3127 lbs.	★★★★	★★★★	★★★★★	★★★★	NOT RATED	✓	
MITSUBISHI GALANT 4DR	3127 lbs.	★★★★	★★★★	★★★	★★★★	NOT RATED		
NISSAN ALTIMA 4DR	3054 lbs.	★★★★	★★★★★	★★★	★★★	NOT RATED		
NISSAN MAXIMA 4DR	3233 lbs.	★★★★	★★★★	★★★★	★★★★	NOT RATED	✓	
NISSAN MAXIMA 4DR	3233 lbs.	★★★★	★★★★	★★★★	★★★★	NOT RATED		
OLDSMOBILE ALERO 2DR	3018 lbs.	★★★★	★★★★★	★	★★★★	NOT RATED		
OLDSMOBILE ALERO 4DR	3096 lbs.	★★★★	★★★★	★★★	★★★	★★★★		
OLDSMOBILE INTRIGUE 4DR	3453 lbs.	NOT TESTED	NOT TESTED	★★★	★	NOT RATED		
PONTIAC FIREBIRD 2DR	3336 lbs.	★★★★	★★★★★	★★★	★★★★	NOT RATED		

PONTIAC GRAND AM 2DR	3018 lbs.	★★★★	★★★★★	★	★★★★	NOT RATED		
PONTIAC GRAND AM 4DR	3096 lbs.	★★★★	★★★★	★★★	★★★	★★★★		
PONTIAC GRAND PRIX 4DR	3346 lbs.	★★★★	★★★★	★★	★★★	NOT RATED		
SUBARU LEGACY 4DR	3268 lbs.	★★★★	★★★★	NOT TESTED	NOT TESTED	NOT RATED		
SUBARU LEGACY 4DR WAGON	3268 lbs.	★★★★	★★★★	★★★★	★★★★★	NOT RATED		
TOYOTA AVALON 4DR	3411 lbs.	★★★	★★★★★	★★★★	★★★★★	NOT RATED	✓	
TOYOTA CAMRY 4DR	3175 lbs.	★★★★	★★★★★	★★★	★★★	★★★★★		
TOYOTA CAMRY 4DR	3175 lbs.	★★★★	★★★★★	★★★★	NO DATA	★★★★★	✓	
TOYOTA CAMRY SOLARA 2DR	3254 lbs.	NOT TESTED	NOT TESTED	★★★	★★★★★	NOT RATED		
VOLKSWAGEN PASSAT 4DR	3168 lbs.	★★★★★	★★★★★	★★★★	★★★★	NOT RATED	✓	

NOTE: "seat too small" means the testing laboratory could not reasonably seat the crash test dummy in the rear seat.
¶ Electronic stability control is available as an option.

2001 Heavy Passenger Cars (3500 lbs. and over curb weight)

ACURA RL 4DR	3824 lbs.	★★★★	★★★★	NOT TESTED	NOT TESTED	NOT RATED	✓	
AUDI A8 4DR	3751 lbs.	★★★★★	★★★★★	NOT TESTED	NOT TESTED	NOT RATED	✓	✓
BUICK LESABRE 4DR	3608 lbs.	★★★★	★★★★★	★★★★	★★★★	NOT RATED	✓	
BUICK PARK AVENUE 4DR	3767 lbs.	★★★★	★★★★	★★★★	★★★★	NOT RATED	✓	
CADILLAC DEVILLE 4DR	4011 lbs.	★★★	★★★★	★★★★	★★★★	NOT RATED	✓	✓
CHRYSLER 300M 4DR	3598 lbs.	★★★ !	★★★★	NOT TESTED	NOT TESTED	NOT RATED		
CHRYSLER LHS 4DR	3598 lbs.	★★★ !	★★★★	★★★★	★★★	NOT RATED		
FORD CROWN VICTORIA 4DR	3922 lbs.	★★★★★	★★★★★	★★★★	★★★★	★★★★★		
LINCOLN LS 4DR	3735 lbs.	★★★★★	★★★★★	★★★★	★★★★★	★★★★★¶	✓	✓
LINCOLN TOWN CAR 4DR	4121 lbs.	★★★★★	★★★★★	★★★★	★★★★	NOT RATED	✓	
MERCURY GRAND MARQUIS 4DR	3922 lbs.	★★★★★	★★★★★	★★★★	★★★★	★★★★★		
OLDSMOBILE AURORA 4DR	3624 lbs.	★★★★	★★★★	★★★	★★★★	NOT RATED	✓	
PONTIAC BONNEVILLE 4DR	3608 lbs.	★★★★	★★★★★	★★★★	★★★★	NOT RATED	✓	
VOLVO S80 4DR	3556 lbs.	★★★★★	★★★★★	★★★★★	★★★★★	NOT RATED	✓	

NOTE: The Volvo S80 has an automatic safety device, a curtain, that inflates down to protect the head of both the driver and the rear passenger in a side crash.
¶ Electronic stability control is available as an option.
! High likelihood of thigh injury.

(*continued on next page*)

New Car Assessment Program Ratings Chart (*continued*)

MAKE & MODEL		FRONTAL CRASH RATING		SIDE CRASH RATING		ROLLOVER RESISTANCE RATING	SIDE AIR BAG	
		DRIVER	PASSENGER	DRIVER	PASSENGER		FRONT	REAR
			2001 Sport Utility Vehicles					
CHEVROLET BLAZER 4DR 4X2	3888 lbs.	NOT TESTED	NOT TESTED	NOT TESTED	NOT TESTED	★		
CHEVROLET BLAZER 4DR 4X4	4164 lbs.	★★★	★★★★	★★★★★	★★★★★	★★		
CHEVROLET SUBURBAN 4DR 4X2	5508 lbs.	NOT TESTED	NOT TESTED	NOT TESTED	NOT TESTED	★★★	✓	
CHEVROLET SUBURBAN 4DR 4X4	5699 lbs.	★★★★	★★★★	NOT TESTED	NOT TESTED	★★★	✓	
CHEVROLET TAHOE 4DR 4X2	5233 lbs.	NOT TESTED	NOT TESTED	NOT TESTED	NOT TESTED	★★	✓	
CHEVROLET TAHOE 4DR 4X4	5421 lbs.	★★★ !	★★★★	NOT TESTED	NOT TESTED	★★★	✓	
CHEVROLET TRACKER 2DR 4X4	2661 lbs.	NOT TESTED	NOT TESTED	★★★★	★★★★★	NOT RATED		
CHEVROLET TRACKER 4DR 4X2	3067 lbs.	NOT TESTED	NOT TESTED	NOT TESTED	NOT TESTED	★★★		
CHEVROLET TRACKER 4DR 4X4	3005 lbs.	★★★★	★★★★	NOT TESTED	NOT TESTED	★★★		
CHEVROLET TRAILBLAZER (2002) 4DR 4X2	4369 lbs.	NOT TESTED	NOT TESTED	NOT TESTED	NOT TESTED	★★★	✓	
CHEVROLET TRAILBLAZER (2002) 4DR 4X4	4704 lbs.	NOT TESTED	NOT TESTED	NOT TESTED	NOT TESTED	★★★	✓	
DODGE DURANGO 4DR 4X2	4404 lbs.	NOT TESTED	NOT TESTED	NOT TESTED	NOT TESTED	★★★		
DODGE DURANGO 4DR 4X4	4708 lbs.	★★★★	★★★★	NOT TESTED	NOT TESTED	★★★		
FORD ESCAPE 4DR 4X2	3037 lbs.	NOT TESTED	NOT TESTED	NOT TESTED	NOT TESTED	★★★		
FORD ESCAPE 4DR 4X4	3421 lbs.	★★★★★	★★★★	★★★★★	★★★★★	★★★		
FORD EXPEDITION 4DR 4X2	5117 lbs.	NOT TESTED	NOT TESTED	NOT TESTED	NOT TESTED	★★	✓	
FORD EXPEDITION 4DR 4X4	4332 lbs.	★★★★★	★★★★★	NOT TESTED	NOT TESTED	★★	✓	
FORD EXPLORER 4DR 4X2	4040 lbs.	NOT TESTED	NOT TESTED	NOT TESTED	NOT TESTED	★★	✓	
FORD EXPLORER 4DR 4X4	4258 lbs.	★★★★	★★★★	★★★★★	★★★★★	★★	✓	
FORD EXPLORER 4DR 4X4	4258 lbs.	★★★★	★★★★	★★★★★	★★★★★	★★		
FORD EXPLORER (2002) 4DR 4X2	4320 lbs.	NOT TESTED	NOT TESTED	NOT TESTED	NOT TESTED	★★		
FORD EXPLORER (2002) 4DR 4X4	4498 lbs.	★★★★	★★★★★	NOT TESTED	NOT TESTED	★★★		
GMC ENVOY (2002) 4DR 4X2	4369 lbs.	NOT TESTED	NOT TESTED	NOT TESTED	NOT TESTED	★★★	✓	
GMC ENVOY (2002) 4DR 4X4	4704 lbs.	NOT TESTED	NOT TESTED	NOT TESTED	NOT TESTED	★★★	✓	
GMC JIMMY 4DR 4X2	3888 lbs.	NOT TESTED	NOT TESTED	NOT TESTED	NOT TESTED	★		

GMC JIMMY 4DR 4X4	4164 lbs.	★★★	★★★★	★★★★★	★★★★★	★★	
GMC YUKON 4DR 4X2	5233 lbs.	NOT TESTED	NOT TESTED	NOT TESTED	NOT TESTED	★★	✓
GMC YUKON 4DR 4X4	5382 lbs.	★★★ !	★★★★	NOT TESTED	NOT TESTED	★★★	✓
GMC YUKON XL 4DR 4X4	5508 lbs.	NOT TESTED	NOT TESTED	NOT TESTED	NOT TESTED	★★★	✓
GMC YUKON XL 4DR 4X4	5699 lbs.	★★★★	★★★★	NOT TESTED	NOT TESTED	★★★	✓
HONDA CR-V 4DR 4X2	3078 lbs.	NOT TESTED	NOT TESTED	NOT TESTED	NOT TESTED	★★★	
HONDA CR-V 4DR 4X4	3149 lbs.	★★★★	★★★★★	★★★★★	★★★★★	★★★	
HONDA PASSPORT 4DR 4X2	3683 lbs.	NOT TESTED	NOT TESTED	NOT TESTED	NOT TESTED	★★★	
HONDA PASSPORT 4DR 4X4	3968 lbs.	★★★★	★★★★	★★★★★	★★★★★	★★★	
INFINITI QX4 4DR 4X4	4147 lbs.	★★★★	★★★★★	★★★★★	★★★★★	★★★	✓
ISUZU RODEO 4DR 4X2	3683 lbs.	NOT TESTED	NOT TESTED	NOT TESTED	NOT TESTED	★★★	
ISUZU RODEO 4DR 4X4	3968 lbs.	★★★★	★★★★	★★★★★	★★★★★	★★★	
JEEP CHEROKEE 2DR 4X2	3266 lbs.	NOT TESTED	NOT TESTED	NOT TESTED	NOT TESTED	★★	
JEEP CHEROKEE 4DR 4X4	3457 lbs.	★★★	★★★	★★★	★★★★★	★★	
JEEP GRAND CHEROKEE 4DR 4X2	3818 lbs.	NOT TESTED	NOT TESTED	NOT TESTED	NOT TESTED	★★	
JEEP GRAND CHEROKEE 4DR 4X4	3968 lbs.	★★★	★★★	★★★★	★★★★★	★★	
JEEP LIBERTY (2002) 4DR 4X2	3895 lbs.	NOT TESTED	NOT TESTED	NOT TESTED	NOT TESTED	★★	
JEEP LIBERTY (2002) 4DR 4X4	4067 lbs.	NOT TESTED	NOT TESTED	NOT TESTED	NOT TESTED	★★	
JEEP WRANGLER 2DR 4X4	3322 lbs.	★★★★	★★★★	NOT TESTED	NOT TESTED	★★★	
LEXUS RX300 4DR 4X2	3747 lbs.	NOT TESTED	NOT TESTED	NOT TESTED	NOT TESTED	★★★§	✓
LEXUS RX300 4DR 4X4	3961 lbs.	★★★★	★★★★★	★★★★★	★★★★★	★★★§	✓
LINCOLN NAVIGATOR 4DR 4X2	5117 lbs.	NOT TESTED	NOT TESTED	NOT TESTED	NOT TESTED	★★	✓
LINCOLN NAVIGATOR 4DR 4X4	5332 lbs.	★★★★★	★★★★★	NOT TESTED	NOT TESTED	★★	✓
MAZDA TRIBUTE 4DR 4X2	3037 lbs.	NOT TESTED	NOT TESTED	NOT TESTED	NOT TESTED	★★★	
MAZDA TRIBUTE 4DR 4X4	3421 lbs.	★★★★★	★★★★	★★★★★	★★★★★	★★★	
MERCURY MOUNTAINEER 4DR 4X2	4040 lbs.	NOT TESTED	NOT TESTED	NOT TESTED	NOT TESTED	★★	
MERCURY MOUNTAINEER 4DR 4X4	4258 lbs.	★★★★	★★★★	★★★★★	★★★★★	★★	✓
MERCURY MOUNTAINEER 4DR 4X4	4258 lbs.	★★★★	★★★★	★★★★★	★★★★★	★★	
MERCURY MOUNTAINEER (2002) 4DR 4X2	4320 lbs.	NOT TESTED	NOT TESTED	NOT TESTED	NOT TESTED	★★	

! High likelihood of thigh injury.
§ Electronic stability control is standard.

(*continued on next page*)

New Car Assessment Program Ratings Chart (*continued*)

MAKE & MODEL		FRONTAL CRASH RATING		SIDE CRASH RATING		ROLLOVER RESISTANCE RATING	SIDE AIR BAG	
		DRIVER	PASSENGER	DRIVER	PASSENGER		FRONT	REAR
2001 Sport Utility Vehicles (*continued*)								
MERCURY MOUNTAINER (2002) 4DR 4X4	4498 lbs.	★★★★	★★★★★	NOT TESTED	NOT TESTED	★★★		
MITSUBISHI MONTERO SPORT 4DR 4X2	3952 lbs.	NOT TESTED	NOT TESTED	NOT TESTED	NOT TESTED	★★		
MITSUBISHI MONTERO SPORT 4DR 4X4	4180 lbs.	★★★★	★★★	NOT TESTED	NOT TESTED	★★		
NISSAN PATHFINDER 4DR 4X2	3861 lbs.	NOT TESTED	NOT TESTED	NOT TESTED	NOT TESTED	★★		
NISSAN PATHFINDER 4DR 4X4	4147 lbs.	★★★★	★★★★★	★★★★★	★★★★★	★★★	✓	
NISSAN PATHFINDER 4DR 4X4	4147 lbs.	★★★★	★★★★★	★★★★★	★★★★★	★★★		
NISSAN XTERRA 4DR 4X2	3845 lbs.	NOT TESTED	NOT TESTED	NOT TESTED	NOT TESTED	★★		
NISSAN XTERRA 4DR 4X4	3580 lbs.	★★★★	★★★★	★★★★	★★★★★	★★		
OLDSMOBILE BRAVADA 4DR 4X4	4164 lbs.	★★★	★★★★	★★★★★	★★★★★	★★		
OLDSMOBILE BRAVADA (2002) 4DR 4X2	4369 lbs.	NOT TESTED	NOT TESTED	NOT TESTED	NOT TESTED	★★★	✓	
OLDSMOBILE BRAVADA (2002) 4DR 4X4	4704 lbs.	NOT TESTED	NOT TESTED	NOT TESTED	NOT TESTED	★★★	✓	
PONTIAC AZTEK 4DR 4X2	3780 lbs.	NOT TESTED	NOT TESTED	★★★★★	★★★	★★★	✓	
PONTIAC AZTEK 4DR 4X4	4054 lbs.	★★★	★★★★	NOT TESTED	NOT TESTED	★★★★	✓	
SUBARU FORESTER 4DR 4X4	3252 lbs.	★★★★	★★★★	★★★★★	★★★★	★★★		
SUZUKI GRAND VITARA 4DR 4X4	3005 lbs.	★★★★	★★★★	NOT TESTED	NOT TESTED	NOT RATED		
SUZUKI GRAND VITARA 4DR 4X2	3067 lbs.	NOT TESTED	NOT TESTED	NOT TESTED	NOT TESTED	★★★		
SUZUKI VITARA 2DR 4X4	2661 lbs.	NOT TESTED	NOT TESTED	★★★★	★★★★★	NOT RATED		
SUZUKI VITARA 4DR 4X4	3005 lbs.	★★★★	★★★★	NOT TESTED	NOT TESTED	★★★		
TOYOTA 4RUNNER 4DR 4X2	3857 lbs.	NOT TESTED	NOT TESTED	NOT TESTED	NOT TESTED	★★§		
TOYOTA 4RUNNER 4DR 4X4	4118 lbs.	★★★★	★★★★	★★★★★	★★★★★	★★§		
TOYOTA RAV4 4DR 4X2	3072 lbs.	NOT TESTED	NOT TESTED	NOT TESTED	NOT TESTED	★★★		
TOYOTA RAV4 4DR 4X4	3072 lbs.	★★★★	★★★★	NOT TESTED	NOT TESTED	★★★		

§ Electronic stability control is standard.

2001 Light Trucks

CHEVROLET S10 PU 4X2	3072 lbs.	★★★	★★★	★★★★	NO SEAT	★★★
CHEVROLET S10 PU EXCAB 4X2	3536 lbs.	★★	★★★	★★★	SEAT TOO SMALL	★★★
CHEVROLET S10 PU EXCAB 4X4	3875 lbs.	NOT TESTED	NOT TESTED	NOT TESTED	NOT TESTED	★★★
CHEVROLET SILVERADO PU EXCAB 4X2	4423 lbs.	★★★	★★★★	NOT TESTED	NOT TESTED	★★★★
CHEVROLET SILVERADO PU EXCAB 4X4	4698 lbs.	NOT TESTED	NOT TESTED	NOT TESTED	NOT TESTED	★★★
DODGE DAKOTA PU EXCAB 4X2	3765 lbs.	NOT TESTED	NOT TESTED	★★★★★	SEAT TOO SMALL	★★★★
DODGE DAKOTA PU EXCAB 4X4	4396 lbs.	NOT TESTED	NOT TESTED	NOT TESTED	NOT TESTED	★★★
DODGE DAKOTA 4DR PU 4X2	4198 lbs.	★★★★	★★★★	★★★★★	★★★★★	NOT RATED
DODGE RAM 1500 PU 4X2	4226 lbs.	★★★★★	★★★★★	NOT TESTED	NOT TESTED	NOT RATED
DODGE RAM 1500 PU EXCAB 4X2	4896 lbs.	★★★★	★★★★	NOT TESTED	NOT TESTED	★★★
DODGE RAM 1500 PU EXCAB 4X4	5439 lbs.	NOT TESTED	NOT TESTED	NOT TESTED	NOT TESTED	★★★
DODGE RAM 1500 PU 4DR 4X2	4884 lbs.	★★★	★★★★	NOT TESTED	NOT TESTED	NOT RATED
FORD EV RANGER PU 4X2	4808 lbs.	★★★★★	★★★★★	NOT TESTED	NOT TESTED	NOT RATED
FORD F150 PU 4X2	3926 lbs.	NOT TESTED	NOT TESTED	★★★★★	NO SEAT	★★★
FORD F150 PU 4X4	4601 lbs.	NOT TESTED	NOT TESTED	NOT TESTED	NOT TESTED	★★
FORD F150 PU EXCAB 4X2	4388 lbs.	★★★★	★★★★★	★★★★★	★★★★★	NOT RATED
FORD F150 4DR 4X2	4650 lbs.	★★★★★	★★★★★	NOT TESTED	NOT TESTED	NOT RATED
FORD RANGER PU 4X2	2995 lbs.	NOT TESTED	NOT TESTED	★★★★★	NO SEAT	NOT RATED
FORD RANGER PU EXCAB 4X2	3419 lbs.	★★★★	★★★★	★★★★	SEAT TOO SMALL	★★★
FORD RANGER PU EXCAB 4X4	3942 lbs.	NOT TESTED	NOT TESTED	NOT TESTED	NOT TESTED	★★
GMC SIERRA PU EXCAB 4X2	4423 lbs.	★★★	★★★★	NOT TESTED	NOT TESTED	★★★★
GMC SIERRA PU EXCAB 4X4	4698 lbs.	NOT TESTED	NOT TESTED	NOT TESTED	NOT TESTED	★★★
GMC SONOMA PU 4X2	3072 lbs.	★★★	★★★	★★★★	NO SEAT	★★★
GMC SONOMA PU EXCAB 4X2	3536 lbs.	★★	★★★	★★★	SEAT TOO SMALL	★★★
GMC SONOMA PU EXCAB 4X4	3875 lbs.	NOT TESTED	NOT TESTED	NOT TESTED	NOT TESTED	★★★
MAZDA B-SERIES 4X2	3543 lbs	NOT TESTED	NOT TESTED	★★★★★	NO SEAT	NOT RATED
MAZDA B-SERIES EXCAB 4X2	3612 lbs	★★★★	★★★★	★★★★	SEAT TOO SMALL	★★★
MAZDA B-SERIES EXCAB 4X4	3942 lbs.	NOT TESTED	NOT TESTED	NOT TESTED	NOT TESTED	★★
NISSAN FRONTIER PU EXCAB 4X2	2816 lbs	NOT TESTED	NOT TESTED	★★★★	NO SEAT	NOT RATED

NOTE: For extended cab light trucks, "seat too small" means the testing laboratory could not reasonably seat the crash test dummy in the rear seat.

(*continued on next page*)

New Car Assessment Program Ratings Chart (*continued*)

MAKE & MODEL		FRONTAL CRASH RATING		SIDE CRASH RATING		ROLLOVER RESISTANCE RATING	SIDE AIR BAG	
		DRIVER	PASSENGER	DRIVER	PASSENGER		FRONT	REAR
2001 Light Trucks (*continued*)								
NISSAN FRONTIER 4DR PU 4X2	3899 lbs.	★★★★	★★★★★	★★★★★	★★★★★	★★★		
NISSAN FRONTIER 4DR PU 4X4	4203 lbs.	NOT TESTED	NOT TESTED	NOT TESTED	NOT TESTED	★★★		
TOYOTA TACOMA PU EXCAB 4X2	3040 lbs.	★★★	★★★★	★★★	SEAT TOO SMALL	TO BE RATED		
TOYOTA TACOMA 4-DR PU 4X4	3867 lbs.	NOT TESTED	NOT TESTED	NOT TESTED	NOT TESTED	★★		
TOYOTA TUNDRA PU EXCAB 4X2	4381 lbs.	★★★	★★★	NOT TESTED	NOT TESTED	TO BE RATED		
TOYOTA TUNDRA PU EXCAB 4X4	4649 lbs.	NOT TESTED	NOT TESTED	NOT TESTED	NOT TESTED	★★★		

NOTE: For extended cab light trucks, "seat too small" means the testing laboratory could not reasonably seat the crash test dummy in the rear seat.

2001 Vans								
CHEVROLET ASTRO	4468 lbs.	★★★	★★★★	NOT TESTED	NOT TESTED	★★★		
CHEVROLET VENTURE	3720 lbs.	★★★★	★★★★	★★★★★	★★★★	★★★	✓	
CHRYSLER PT CRUISER	3203 lbs.	★★	★★★★	★★★★	★★★★★	★★★★	✓	
CHRYSLER TOWN & COUNTRY	4332 lbs.	★★★★	★★★★	★★★★★	★★★★★	★★★	✓	
CHRYSLER TOWN & COUNTRY	4332 lbs.	★★★★	★★★★	★★★★★	★★★★★	★★★		
CHRYSLER VOYAGER	3874 lbs.	★★★★	★★★★	★★★★	★★★★★	★★★		
DODGE CARAVAN	3874 lbs.	★★★★	★★★★	★★★★	★★★★★	★★★		
DODGE GRAND CARAVAN	4332 lbs.	★★★★	★★★★	★★★★★	★★★★★	★★★	✓	
DODGE GRAND CARAVAN	4332 lbs.	★★★★	★★★★	★★★★★	★★★★★	★★★		

DODGE RAM 1500 WAGON	4192 lbs.	★★★★	★★★★	NOT TESTED	NOT TESTED	★★★	
FORD ECONOLINE	4760 lbs.	★★★★	★★★★	NOT TESTED	NOT TESTED	★★	
FORD WINDSTAR	4231 lbs.	★★★★★	★★★★★	★★★★	★★★★	★★★★	
FORD WINDSTAR	4231 lbs.	★★★★★	★★★★★	★★★★★	★★★★★	★★★★	✓
GMC SAFARI	4468 lbs.	★★★	★★★★	NOT TESTED	NOT TESTED	★★★	
HONDA ODYSSEY	4244 lbs.	★★★★★	★★★★★	★★★★★	★★★★★	★★★★	
MAZDA MPV	3660 lbs.	★★★★	★★★★	★★★★★	★★★★★	★★★	
MERCURY VILLAGER	3971 lbs.	★★★★★	★★★★★	★★★★★	★★★★	★★★★	
NISSAN QUEST	3971 lbs.	★★★★★	★★★★★	★★★★★	★★★★	★★★★	
OLDSMOBILE SILHOUETTE	3720 lbs.	★★★★	★★★★	★★★★★	★★★★	★★★	✓
PONTIAC MONTANA	3857 lbs.	★★★★	★★★	★★★★★	★★★★	★★★	✓
TOYOTA SIENNA	3973 lbs.	★★★★★	★★★★★	★★★★	★★★★★	★★★★¶	

¶ Electronic stability control is available as an option.

Rollover Rated Vehicle Details

VEHICLE	DRIVE	ROLLOVER RESISTANCE RATING	SSF	MEASURED VEHICLE DETAILS: BODY STYLE/ TRIM	ENGINE	TRANS	TIRE SIZE	MAJOR OPTIONS	ELECTRONIC STABILITY CONTROL
2001 Light Passenger Cars (2000–2499 lbs. curb weight)									
Chevrolet Prizm	front	★★★★	1.42	4dr	1.8L I4	automatic	P175/65R14		
Hyundai Accent	front	★★★★	1.42	4dr, GL	1.6L I4	automatic	P175/70R13		
Saturn SL	front	★★★★	1.35	4dr	1.9L I4	5spd manual	P175/70R14		
Toyota Corolla	front	★★★★	1.42	4dr, CE	1.8L I4	automatic	P175/65R14		
Toyota Echo	front	★★★★	1.32	4dr	1.5L I4	automatic	P175/65R14		
2001 Compact Passenger Cars (2500–2999 lbs. curb weight)									
Chevrolet Cavalier	front	★★★★	1.35	4dr	2.2L I4	automatic	P195/70R14		
Dodge Neon	front	★★★★	1.41	4dr, SE	2.0L I4	automatic	P185/65R14		
Ford Focus	front	★★★★	1.33	4dr, SE	2.0L I4	automatic	P195/60R15		available
Honda Civic	front	★★★★	1.40	4dr, EX	1.7L I4	automatic	P185/65R15	sun roof	
Plymouth Neon	front	★★★★	1.41	4dr	2.0L I4	automatic	P185/65R14		
Pontiac Sunfire	front	★★★★	1.35	4dr	2.2L I4	automatic	P195/70R14		
Volkswagen Jetta	front	★★★★	1.37	4dr	2.0L I4	5 spd manual	P195/65R15	sun roof	
2001 Medium Passenger Cars (3000–3499 lbs. curb weight)									
Chevrolet Impala	front	★★★★	1.36	4dr	3.4L V6	automatic	P225/60R16		
Chevrolet Lumina	front	★★★★	1.34	4dr	3.1L V6	automatic	P205/70R15		
Chrysler Sebring	front	★★★★★	1.49	4dr	2.4L I4	automatic	P205/65R15		
Dodge Stratus	front	★★★★★	1.49	4dr, SE	2.4L I4	automatic	P205/65R15		
Ford Taurus	front	★★★★	1.43	4dr, SE	3.0L V6	automatic	P215/60R16		
Honda Accord	front	★★★★★	1.45	4dr, EX	2.3L I4	automatic	P195/65R15	sun roof	
Mercury Sable	front	★★★★	1.43	4dr	3.0L V6	automatic	P215/60R16		available
Oldsmobile Alero	front	★★★★	1.41	4dr	3.4L V6	automatic	P215/60R15		
Pontiac Grand Am	front	★★★★	1.41	4dr, SE	3.4L V6	automatic	P215/60R15		
Toyota Camry	front	★★★★★	1.45	4dr, CE	2.2L I4	automatic	P205/65R15		

2001 Heavy Passenger Cars (3500 lbs. and over curb weight)									
Ford Crown Victoria	rear	★★★★★	1.51	4dr, LX	4.6L V8	automatic	P225/60R16		
Lincoln LS	rear	★★★★★	1.51	4dr	3.0L V6	automatic	P215/60R16	sun roof	available
Mercury Grand Marquis	rear	★★★★★	1.51	4dr	4.6L V8	automatic	P225/60R16		
2001 Sport Utility Vehicles									
Chevrolet Blazer	rear	★	1.02	4dr	4.3L V6	automatic	P235/70R15	roof rack	
	4×4	★★	1.09	4dr, LT	4.3L V6	automatic	P235/70R15	roof rack	
Chevrolet Suburban	rear	★★★	1.13	4dr	5.3L V8	automatic	P265/70R16	roof rack, tow hitch	
	4×4	★★★	1.14	4dr	5.3L V8	automatic	P265/70R16	roof rack	
Chevrolet Tahoe	rear	★★	1.12	4dr	5.3L V8	automatic	P265/75R16	roof rack, tow hitch	
	4×4	★★★	1.14	4dr	5.3L V8	automatic	P265/70R16	sun roof, roof rack	
Chevrolet Tracker	rear	★★★	1.16	4dr	2.5L V6	automatic	P215/70R15		
	4×4	★★★	1.15	4dr	2.0L I4	automatic	P205/75R15	roof rack	
Chevrolet TrailBlazer	rear	★★★	1.16	4dr, LS	4.2L I6	automatic	P245/70R16	roof rack, tow hitch	
(2002)	4×4	★★★	1.18	4dr, LT	4.2L I6	automatic	P245/70R16	roof rack, sun roof, tow hitch	
Dodge Durango	rear	★★★	1.20	4dr, Sport	4.7L V8	automatic	P235/75R15	3rd seat	
	4×4	★★★	1.16	4dr	4.7L V8	automatic	P265/70R16	roof rack, tow hitch	
Ford Escape	front	★★★	1.17	4dr, XLT	2.0L I4	5spd manual	P225/70R15	roof rack	
	4×4	★★★	1.21	4dr, XLS	3.0L V6	automatic	P225/70R15	roof rack	
Ford Expedition	rear	★★	1.11	4dr, XLT	5.4L V8	automatic	P255/70R16	roof rack	
	4×4	★★	1.11	4dr	5.4L V8	automatic	P255/70R16	roof rack, tow hitch, 3rd seat	
Ford Explorer	rear	★★	1.06	4dr, XLS	4.0L V6	automatic	P235/75R15	roof rack	
	4×4	★★	1.06	4dr, XLT	4.0L V6	automatic	P235/75R15	roof rack	
Ford Explorer (2002)	rear	★★	1.10	4dr, XLT	4.0L V6	automatic	P235/70R16	roof rack, tow hitch	
	4×4	★★★	1.14	4dr, XLS	4.0L V6	automatic	P235/70R16	roof rack	
GMC Envoy (2002)	rear	★★★	1.16	4dr, LS	4.2L I6	automatic	P245/70R16	roof rack, tow hitch	
	4×4	★★★	1.18	4dr, LT	4.2L I6	automatic	P245/70R16	roof rack, sun roof, tow hitch	
GMC Jimmy	rear	★	1.02	4dr	4.3L V6	automatic	P235/70R15	roof rack	
	4×4	★★	1.09	4dr	4.3L V6	automatic	P235/70R15	roof rack	
GMC Yukon	rear	★★	1.12	4dr	5.3L V8	automatic	P265/75R16	roof rack, tow hitch	
	4×4	★★★	1.14	4dr	5.3L V8	automatic	P265/70R16	sun roof, roof rack	
GMC Yukon XL	rear	★★★	1.13	4dr	5.3L V8	automatic	P265/70R16	roof rack, tow hitch	
	4×4	★★★	1.14	4dr	5.3L V8	automatic	P265/70R16	roof rack	

(*continued on next page*)

Rollover Rated Vehicle Details (*continued*)

VEHICLE	DRIVE	ROLLOVER RESISTANCE RATING	SSF	MEASURED VEHICLE DETAILS: BODY STYLE/ TRIM	ENGINE	TRANS	TIRE SIZE	MAJOR OPTIONS	ELECTRONIC STABILITY CONTROL
2001 Sport Utility Vehicles (*continued*)									
Honda CR-V	front	★★★	1.17	4dr	2.0L I4	automatic	P205/70R15		
	4×4	★★★	1.19	4dr	2.0L I4	automatic	P205/70R15		
Honda Passport	rear	★★★	1.15	4dr	2.2L I4	automatic	P225/75R16	roof rack	
	4×4	★★★	1.18	4dr	3.2L V6	automatic	P245/70R16	roof rack	
Infiniti QX4	4×4	★★★	1.16	4dr	3.5L V6	automatic	P255/65R16	roof rack	
Isuzu Rodeo	rear	★★★	1.15	4dr	2.2L I4	automatic	P225/75R16	roof rack	
	4×4	★★★	1.18	4dr	3.2L V6	automatic	P245/70R16	roof rack	
Jeep Cherokee	rear	To be rated							
	4×4	★★	1.08	4dr, Sport	4.0L I6	automatic	P225/75R15		
Jeep Grand Cherokee	rear	★★	1.09	4dr, Laredo	4.0L I4	automatic	P225/75R16	roof rack	
	4×4	★★	1.11	4dr, Laredo	4.0L I6	automatic	P225/75R16	roof rack	
Jeep Liberty (2002)	rear	★★	1.10	4dr, Sport	3.7L V6	automatic	P235/70R16	roof rack	
	4×4	★★	1.12	4dr, Sport	3.7L V6	automatic	P215/75R16	roof rack	
Jeep Wrangler	4×4	★★★	1.13	2dr, Sport	4.0L I6	5spd manual	P225/75R15	soft top, hard doors	
Lexus RX300	front	★★★	1.20	4dr	3.0L V6	automatic	P225/70R16	roof rack	standard
	4×4	★★★	1.21	4dr	3.0L V6	automatic	P225/70R16	roof rack	standard
Lincoln Navigator	rear	★★	1.11	4dr	5.4L V8	automatic	P255/70R16	roof rack	
	4×4	★★	1.11	4dr	5.4L V8	automatic	P255/70R16	roof rack, tow hitch, 3rd seat	
Mazda Tribute	front	★★★	1.17	4dr	2.0L I4	5spd manual	P225/70R15	roof rack	
	4×4	★★★	1.21	4dr	3.0L V6	automatic	P225/70R15	roof rack	
Mercury Mountaineer	rear	★★	1.06	4dr	4.0L V6	automatic	P235/75R15	roof rack	
	4×4	★★	1.06	4dr	4.0L V6	automatic	P235/75R15	roof rack	
Mercury Mountaineer (2002)	rear	★★	1.10	4dr, XLT	4.0L V6	automatic	P235/70R16	roof rack, tow hitch	
	4×4	★★★	1.14	4dr, XLS	4.0L V6	automatic	P235/70R16	roof rack	
Mitsubishi Montero Sport	rear	★★	1.07	4dr, XLS	3.0L V6	automatic	P255/70R16	roof rack	
	4×4	★★	1.11	4dr	3.0L V6	automatic	P225/70R16	roof rack	

Nissan Pathfinder	rear	★★	1.07	4dr, XE	3.5L V6	automatic	P245/70R16	roof rack	
	4×4	★★★	1.16	4dr, SE	3.5L V6	automatic	P255/65R16	roof rack	
Nissan Xterra	rear	★★	1.09	4dr	3.3L V6	automatic	P265/70R15	roof rack, step bar	
	4×4	★★	1.12	4dr, XE	3.3L V6	5spd manual	P265/70R16	roof rack	
Oldsmobile Bravada	4×4	★★	1.09	4dr	4.3L V6	automatic	P235/70R15	roof rack	
Oldsmobile Bravada	rear	★★★	1.16	4dr, LS	4.2L I6	automatic	P245/70R16	roof rack, tow hitch	
(2002)	4×4	★★★	1.18	4dr, LT	4.2L I6	automatic	P245/70R16	roof rack, sun roof, tow hitch	
Pontiac Aztek	front	★★★	1.21	4dr	3.4L V6	automatic	P215/70R15	roof rack	
	4×4	★★★★	1.26	4dr	3.4L V6	automatic	P215/70R16	roof rack	
Subaru Forester	4×4	★★★	1.19	4dr, L	2.5L H4	automatic	P205/70R15	roof rack	
Suzuki Grand Vitara	rear	★★★	1.16	4dr	2.5L V6	automatic	P215/70R15		
Suzuki Vitara	4×4	★★★	1.15	4dr	2.0L I4	automatic	P205/75R15	roof rack	
Toyota 4Runner	rear	★★	1.08	4dr, SR5	3.4L V6	automatic	P265/70R16	roof rack	standard
	4×4	★★	1.06	4dr, SR5	3.4L V6	automatic	P265/70R16		standard
Toyota RAV4	front	★★★	1.19	4dr, L	2.0L I4	automatic	P215/70R16		
	4×4	★★★	1.22	4dr, L	2.0L I4	automatic	P235/60R16	roof rack, sun roof, tow hitch	
2001 Light Trucks									
Chevrolet S-10	rear	★★★	1.14	reg. cab	2.2L I4	5spd manual	P205/75R15		
	rear	★★★	1.15	ext. cab, LS	4.3L V6	automatic	P205/75R15		
	4×4	★★★	1.14	ext. cab, LS	4.3L V6	automatic	P235/70R15		
Chevrolet Silverado 1500	rear	★★★★	1.27	ext. cab, LS	4.8L V8	automatic	P235/75R16		
	4×4	★★★	1.19	ext. cab, LS	4.8L V6	automatic	P245/75R16		
Dodge Dakota	rear	★★★★	1.25	ext. cab, Sport	3.9L V6	automatic	P215/75R15		
	4×4	★★★	1.17	ext. cab, SLT	4.7L V8	automatic	P265/70R16		
Dodge Ram 1500	rear	★★★	1.22	ext. cab, SLT	5.2L V8	automatic	P245/75R16		
	4×4	★★★	1.16	ext. cab, SLT	5.2L V8	automatic	P245/75R16	tow hitch	
Ford F-150	rear	★★★	1.22	reg. cab	4.2L V6	automatic	P235/70R16		
	4×4	★★	1.12	reg. cab, XLT	4.2L V6	automatic	P255/70R16		
Ford Ranger	rear	★★★	1.13	ext. cab, XLT	4.0L V6	automatic	P225/70R15		
	4×4	★★	1.04	ext. cab, XLT	3.0L V6	automatic	P245/75R16	bed liner	
GMC Sierra	rear	★★★★	1.27	ext. cab	4.8L V8	automatic	P235/75R16		
	4×4	★★★	1.19	ext. cab	4.8L V6	automatic	P245/75R16		

(*continued on next page*)

Rollover Rated Vehicle Details (*continued*)

VEHICLE	DRIVE	ROLLOVER RESISTANCE RATING	SSF	MEASURED VEHICLE DETAILS: BODY STYLE/ TRIM	ENGINE	TRANS	TIRE SIZE	MAJOR OPTIONS	ELECTRONIC STABILITY CONTROL
				2001 Light Trucks (*continued*)					
GMC Sonoma	rear	★★★	1.14	reg. cab	2.2L I4	5spd manual	P205/75R15		
	rear	★★★	1.15	ext. cab	4.3L V6	automatic	P205/75R15		
	4×4	★★★	1.14	ext. cab	4.3L V6	automatic	P235/70R15		
Mazda B-Series	rear	★★★	1.13	ext. cab	4.0L V6	automatic	P225/70R15		
	4×4	★★	1.04	ext. cab	3.0L V6	automatic	P245/75R16	bed liner	
Nissan Frontier	rear	★★★	1.14	4dr, SE	3.3L V6	5spd manual	P255/65R16	roof rack	
	4×4	★★★	1.13	4dr, SE	3.3L V6	automatic	P265/70R16	roof rack	
Toyota Tacoma	rear	To be rated							
	4×4	★★	1.11	4dr	3.4L V6	automatic	P265/70R16		
Toyota Tundra	rear	To be rated							
	4×4	★★★	1.15	ext. cab, Limtd.	4.7L V8	automatic	P265/70R16		

2001 Vans

Chevrolet Astro	rear	★★★	1.13	3dr, LS	4.3L V6	automatic	P215/75R15	roof rack	
Chevrolet Venture	front	★★★	1.18	long whlbs.	3.4L V6	automatic	P215/70R15	roof rack	
Chrysler PT Cruiser	front	★★★★	1.26	4dr, Lim. Ed.	2.4L I4	automatic	P205/55R/16	sun roof	
Chrysler Town&Country	front	★★★	1.23	4dr	3.3L V6	automatic	P215/70R15	roof rack	
Chrysler Voyager	front	★★★	1.20	4dr	3.3L V6	automatic	P215/70R15	roof rack	
Dodge Caravan	front	★★★	1.20	4dr, SE	3.3L V6	automatic	P215/70R15	roof rack	
Dodge Grand Caravan	front	★★★	1.23	4dr, Sport	3.3L V6	automatic	P215/70R15	roof rack	
Dodge Ram Van/Wagon	rear	★★★	1.14	3dr	5.3L V8	automatic	P235/75R15		
Ford Econoline/ Club Wagon	rear	★★	1.11	Chateau	5.0L V8	automatic	P235/75R15		
Ford Windstar	front	★★★★	1.26	3dr	3.8L V6	automatic	P215/70R15		
GMC Safari	rear	★★★	1.13	3dr, LS	4.3L V6	automatic	P215/75R15	roof rack	
Honda Odyssey	front	★★★★	1.32	4dr, EX	3.5L V6	automatic	P215/65R16		
Mazda MPV	front	★★★	1.21	4dr, LX	2.5L V6	automatic	P205/65R15	roof rack	
Mercury Villager	front	★★★★	1.27	4dr	3.3L V6	automatic	P215/65R16	roof rack	
Nissan Quest	front	★★★★	1.27	4dr, GXE	3.3L V6	automatic	P215/65R16	roof rack	
Oldsmobile Silhouette	front	★★★	1.18	long whlbs.	3.4L V6	automatic	P215/70R15	roof rack	
Pontiac Montana	front	★★★	1.18	long whlbs.	3.4L V6	automatic	P215/70R15	roof rack	
Toyota Sienna	front	★★★★	1.25	4dr, CE	3.0L V6	automatic	P205/70R15		Available

ROLLOVER RESISTANCE RATINGS INFORMATION

Description of Rollover Resistance Rating

• Most rollover crashes occur when a vehicle runs off the road and is tripped by a ditch, curb, soft soil, or other object causing it to rollover. These crashes are usually caused by driver behavior such as speeding or inattention. These are called single-vehicle crashes because the crash did not involve a collision with another vehicle. More than 10,000 people die each year in all rollover crashes.

• The **rollover resistance rating** is an estimate of your risk of rolling over if you have a single-vehicle crash. It does not predict the likelihood of that crash. The rollover resistance rating essentially measures vehicle characteristics of center of gravity and track width to determine how "top heavy" a vehicle is. The more top-heavy the vehicle, the more likely it is to roll over. The lowest-rated vehicles (1 star) are at least four times more likely to roll over than the highest-rated vehicles (5 stars).

• The rollover resistance ratings of vehicles were compared to 220,000 actual single-vehicle crashes, and the ratings were found to relate very closely to the real-world rollover experience of vehicles.

• While the rollover resistance rating does not directly predict the risk of injury or death, keep in mind that rollovers have a higher fatality rate than other kinds of crashes. *Remember: Even the highest-rated vehicle can rollover, but you can reduce your chance of being killed in a rollover by about 75 percent just by wearing your seat belt.*

• Here are the rollover resistance ratings: In a single-vehicle crash, a vehicle with a rating of

Five Stars	★★★★★	has a risk of rollover of less than 10 percent.
Four Stars	★★★★	has a risk of rollover between 10 percent and 20 percent.
Three Stars	★★★	has a risk of rollover between 20 percent and 30 percent.
Two Stars	★★	has a risk of rollover between 30 percent and 40 percent.
One Star	★	has a risk of rollover greater than 40 percent.

Frequently Asked Questions About Rollover Resistance Ratings

Why is consumer information for vehicle rollovers necessary?

While rollovers do not occur as frequently as other types of crashes (see Figure D-1), when they do occur, the result is often serious injury or death. Rollovers accounted for more than 10,000 fatalities in the United States in 1999,

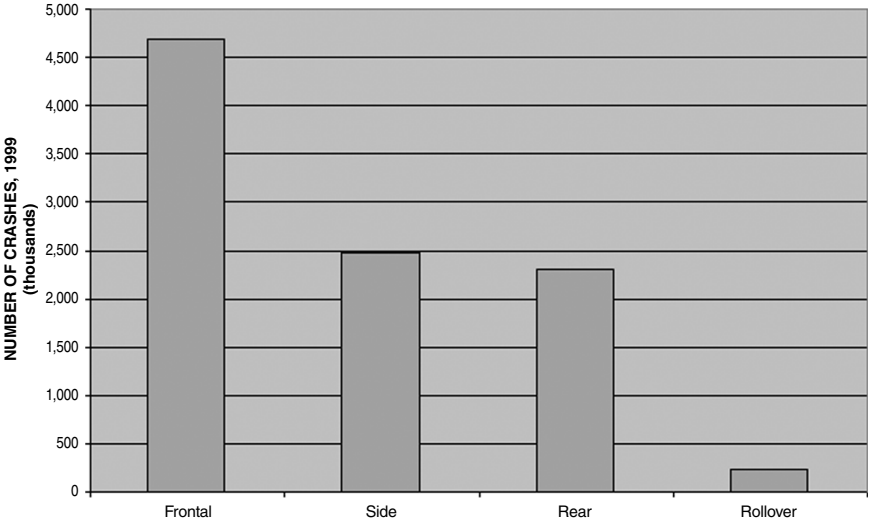

FIGURE D-1 Light vehicle crashes. (SOURCE: NHTSA General Estimates System, 1999.)

more than side and rear crashes combined (see Figure D-2). They also resulted in thousands of serious injuries. NHTSA believes that most of these rollovers, and the tragic injuries that result, are preventable, if consumers understand the roles the driver, roadside environment and vehicle play in causing the rollover.

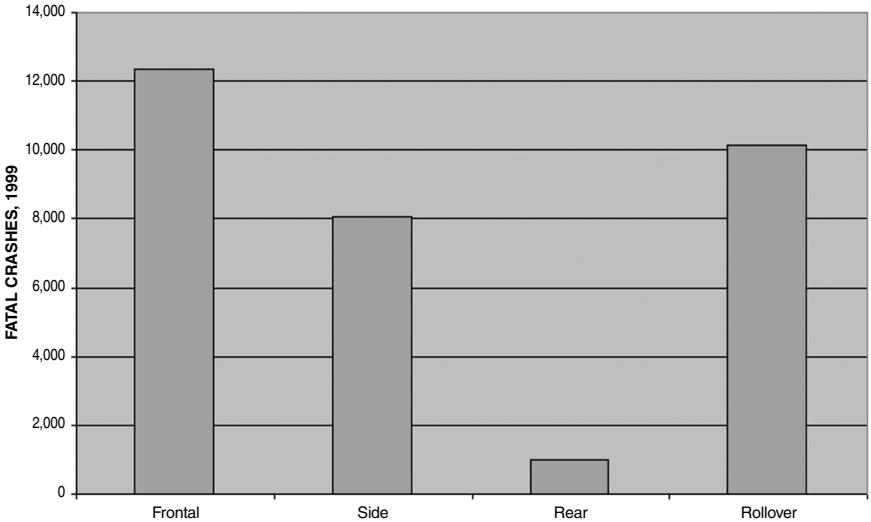

FIGURE D-2 Fatal crashes. (SOURCE: NHTSA Fatality Analysis Reporting System, 1999.)

How do most vehicle rollovers occur?

From its studies of real-world single-vehicle crashes, NHTSA has determined that more than 90 percent of rollovers occur after a driver runs off of the road (see Figure D-3). This does not refer to vehicles trying to negotiate difficult trails away from public roads. It refers to vehicles rolling over off of the pavement after the driver has lost control of the vehicle. Once the vehicle slides off of the pavement, a ditch, soft soil, curb or other tripping mechanism usually initiates the rollover.

How should the consumer interpret NHTSA's rollover resistance ratings?

The rollover resistance ratings are based on static stability factor, which is essentially a measure of how top heavy a vehicle is. The rollover resistance ratings of vehicles were compared to 220,000 actual single vehicle crashes, and the ratings were found to relate very closely to the real-world rollover experience of vehicles. Based on these studies, NHTSA found that taller, narrower vehicles, such as sport utility vehicles (SUVs), are more likely than lower, wider vehicles, such as passenger cars, to trip and roll over once they leave the roadway. Accordingly, NHTSA awards more stars to wider and/or lower vehicles. The rollover resistance rating, however, does not address the causes of the driver losing control and the vehicle leaving the roadway in the first place.

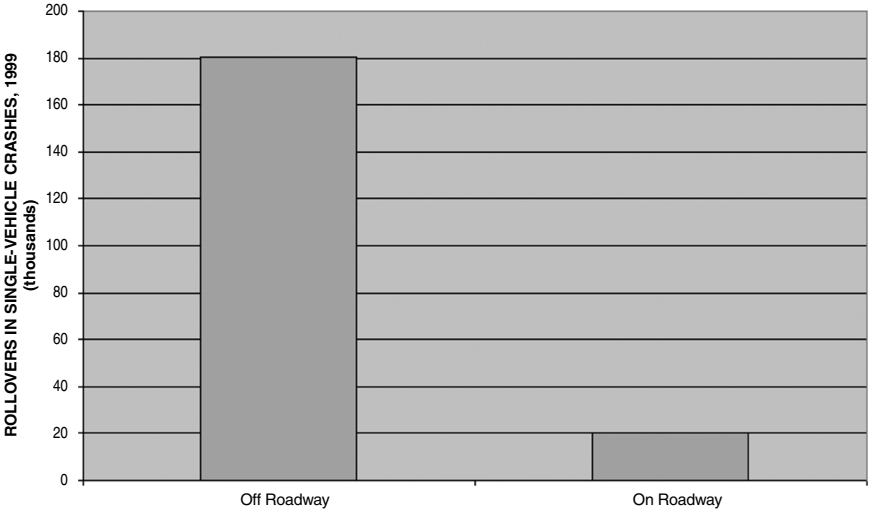

FIGURE D-3 Single-vehicle rollovers. (SOURCE: NHTSA General Estimates System, 1999.)

Does a vehicle with a higher rollover resistance rating mean it is immune from rollovers?

No, even a five-star vehicle has up to a 10 percent risk of rolling over in a single-vehicle crash. In fact, because of the aggressive way in which the vehicle is driven and/or the age and skill of the driver, certain five-star vehicles such as sports cars, may have a higher number of rollovers per hundred registered vehicles than certain three-star vehicles, such as minivans, due to the fact that they are in more single-vehicle crashes.

How does electronic stability control (ESC) affect rollover, and what is its relationship to the rollover resistance ratings?

Most rollovers occur when a vehicle runs off the road and strikes a curb, soft shoulder, guard rail or other object that "trips" it. The rollover resistance ratings estimate the risk of rollover in event of a single-vehicle crash, usually when the vehicle runs off the road. ESC (which is offered under various trade names) is designed to assist drivers in maintaining control of their vehicles during extreme steering maneuvers. It senses when a vehicle is starting to spin out (oversteer) or plow out (understeer), and it turns the vehicle to the appropriate heading by automatically applying the brake at one or more wheels. Some systems also automatically slow the vehicle with further brake and throttle intervention. What makes ESC promising is the possibility that with its aid many drivers will avoid running off the road and having a single-vehicle crash in the first place. However, ESC cannot keep a vehicle on the road if its speed is simply too great for the available traction and the maneuver the driver is attempting, or if road departure is a result of driver inattention. In these cases, a single-vehicle crash will happen, and the rollover resistance rating will apply as it does to all vehicles in the event of a single-vehicle crash. Some of the 2001 model year vehicles that will be rated have ESC and are identified in the charts with the rollover resistance ratings.

What other information does a consumer need to know in order to minimize the chances of rollover?

A rollover crash is a complex event, heavily influenced by driver and road characteristics, as well as the design of the vehicle. Consequently, a consumer should also know that:

- **All vehicles can roll over.** All types of vehicles roll over in certain conditions. While SUVs have the highest number of rollovers per 100 crashes (see Figure D-4), because of the higher numbers of passenger cars on the road, almost half of all rollovers which occurred in 1999 involved passenger cars (see Figure D-5).

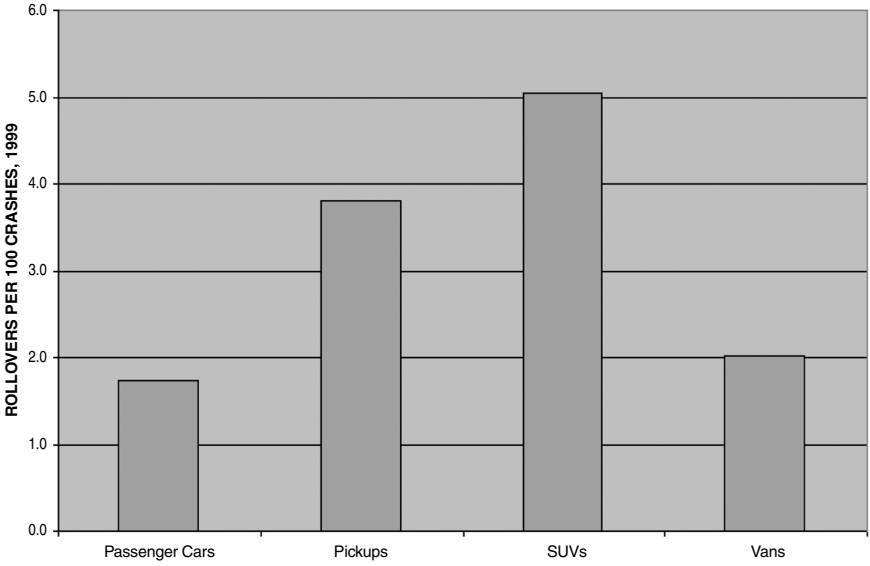

FIGURE D-4 Rollover rate by vehicle type. (SOURCE: NHTSA General Estimates System, 1999.)

• **Rollovers are more likely on rural roads and highways.** When a vehicle goes off rural roads it is likely to overturn when it strikes a ditch or embankment or is tripped by soft soil (see Figure D-6). Many other rollover crashes occur along freeways with grassy or dirt medians when a driver loses

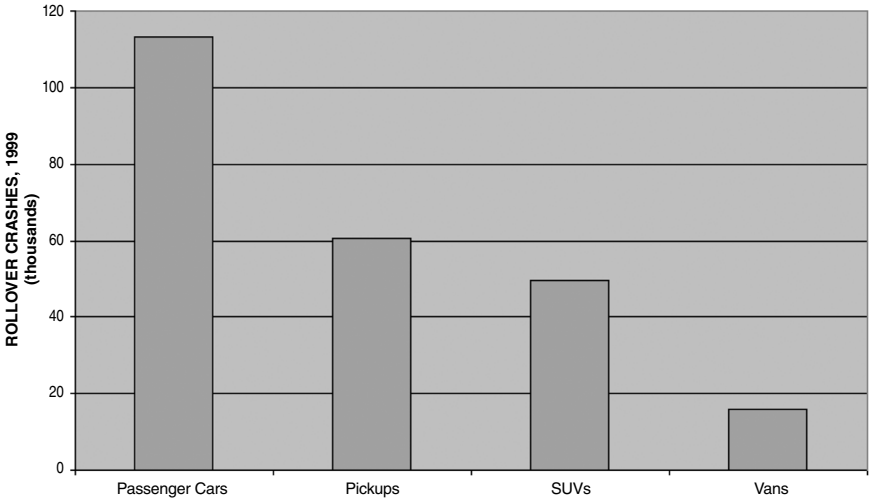

FIGURE D-5 Rollovers by vehicle type. (SOURCE: NHTSA General Estimates System, 1999.)

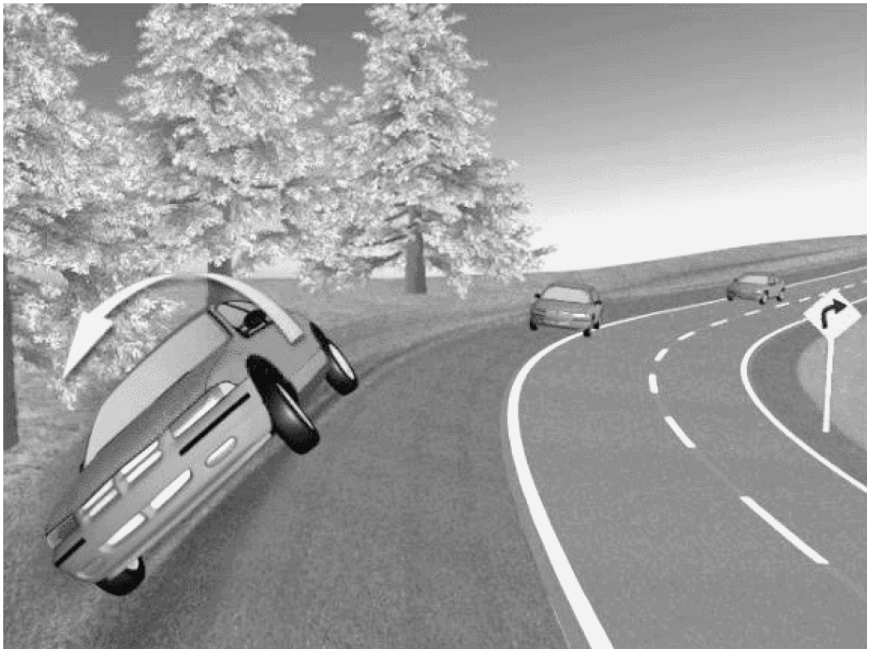

FIGURE D-6 Rural road rollover. (SOURCE: Docket No. NHTSA 2000-6859. Reprinted with permission of American Suzuki Motor Corporation; © American Suzuki Motor Corporation.)

control at highway speeds and the vehicle slides sideways off the road and overturns when the tires dig into the dirt (see Figure D-7).

What can the consumer do to reduce rollover risk?

Since most vehicle rollovers are single-vehicle crashes, they are often preventable. They are unlike non-rollover multiple-vehicle crashes involving frontal, side and rear impacts, where another driver may have been responsible for the crash. To minimize the risk of a rollover crash and serious injury, the driver should

- **Always wear seat belts.** Regardless of vehicle choice, the consumer and his or her passengers can dramatically reduce their risk of being killed or seriously injured in a rollover crash by simply using their seat belts. Seat belt use has an even greater effect on reducing the deadliness of rollover crashes than on other crashes because so many victims of rollover crashes die as a result of being partially or completely thrown from the vehicle. NHTSA estimates that belted occupants are about 75 percent less likely to be killed in a rollover crash than unbelted occupants.

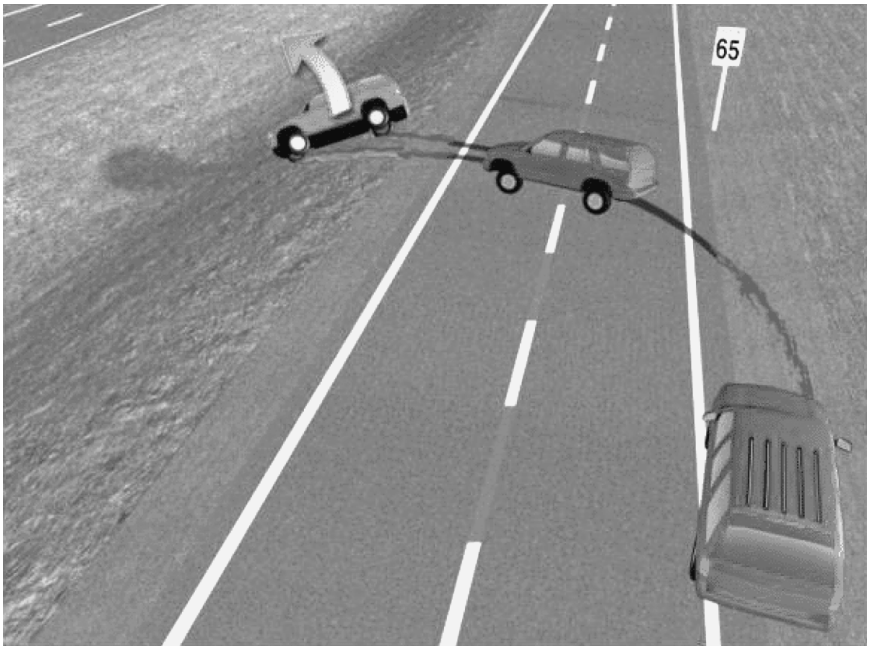

FIGURE D-7 Freeway rollover. (SOURCE: Docket No. NHTSA 2000-6859. Reprinted with permission of American Suzuki Motor Corporation; © American Suzuki Motor Corporation.)

- **Avoid conditions that lead to loss of control.** Common reasons drivers lose control of their vehicles and run off of the road include: driving under the influence of alcohol or drugs, driving while sleepy or inattentive, or driving too fast for the conditions.
- **Be careful on rural roads.** Drivers should be particularly cautious on curved rural roads and maintain a safe speed to avoid running off the road and striking a ditch or embankment and rolling over.
- **Avoid extreme panic-like steering.** Another condition which may cause a rollover is where a driver overcorrects the steering as a panic reaction to an emergency or to something as simple as dropping a wheel off the pavement (see Figure D-8). Especially at freeway speeds, over correcting or excessive steering may cause the driver to lose control resulting in the vehicle sliding sideways and rolling over. If your vehicle should go off the roadway, gradually reduce the vehicle speed and then ease the vehicle back on to the roadway when it is safe to do so (see Figure D-9).
- **Maintain tires properly.** Since maintaining vehicle control is the most important factor in minimizing the chances of a vehicle rollover, improperly inflated and worn tires can be dangerous. Worn tires may cause the vehicle to slide sideways on wet or slippery pavement, resulting in the vehicle sliding off

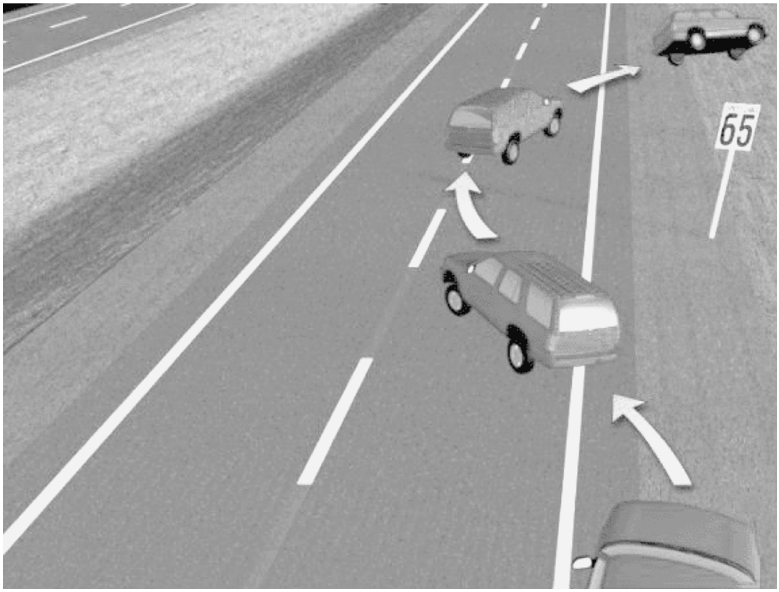

FIGURE D-8 Out-of-control vehicle. (SOURCE: Docket No. NHTSA 2000-6859. Reprinted with permission of American Suzuki Motor Corporation; © American Suzuki Motor Corporation.)

FIGURE D-9 Vehicle under control. (SOURCE: Docket No. NHTSA 2000-6859. Reprinted with permission of American Suzuki Motor Corporation; © American Suzuki Motor Corporation.)

the road and increasing the risk of rolling over. Improper inflation can accelerate tire wear, and can even lead to catastrophic failures. It is important that consumers maintain tires properly and replace them, when necessary.

• **Load vehicles properly.** Consult your owner's manual to determine the maximum safe load for your vehicle, and the proper distribution of that load. Pay special attention to the vehicle manufacturer's instructions and weight limits when using any type of roof rack. Any load placed on the roof will be above the center of gravity of the vehicle and will increase the likelihood of rolling over.

Study Committee Biographical Information

David N. Wormley, *Chair,* is Dean of the College of Engineering at The Pennsylvania State University. His previous positions include Associate Dean of Engineering and Head of the Department of Mechanical Engineering at Massachusetts Institute of Technology. Dr. Wormley's research focuses on the dynamic analysis, optimization, and design of advanced control systems, transportation systems, and fossil fuel energy systems. Dr. Wormley is a Fellow of the American Society of Mechanical Engineers (ASME) and serves as Vice President of ASME's Systems and Design Group. He is also on the editorial board of the *International Journal of Vehicle Mechanics and Mobility*. Dr. Wormley is a former member of the Executive Committee of the Transportation Research Board, which he chaired in 1997. He has received the ASME Lewis Moody Award and the National Aeronautics and Space Administration's Certificate of Recognition. Dr. Wormley obtained B.S., M.S., and Ph.D. degrees in mechanical engineering from the Massachusetts Institute of Technology.

Karin M. Bauer is a Principal Statistician at Midwest Research Institute, Kansas City, Missouri. Her research in transportation engineering addresses highway and traffic safety, and has included the development of statistical models for defining relationships between accidents and various highway design elements. She has investigated traffic conflict and accident relationships, traffic safety problems on rural highways, technological advances to deter speeding, accident reduction benefits of clear recovery zones, and predictor models for seasonal variation in pavement skid resistance. Ms. Bauer received a B.S. in mathematics and physics from the University of Strasbourg, France; a B.S. in statistics from the University of Dortmund, Germany; and an M.S. in applied statistics, also from the University of Dortmund.

James E. Bernard is Anson Marston Distinguished Professor of Engineering at Iowa State University and Director of the Virtual Reality Applications Center. His research interests include vehicle dynamics and driving simulation, and he is a member of the Vehicle Dynamics Subcommittee of the Society of Automotive Engineers (SAE). He has written many papers relating to motor vehicle rollover and associated vehicle test methods, including a comprehensive literature review. Dr. Bernard has received several awards for his contributions to graduate and undergraduate teaching, including the SAE Ralph R. Teetor Award for "significant contributions to teaching, research and student development." He has received awards for his technical research papers from *Tire Science and Technology* and the MSC NASTRAN World Users

Conference. Dr. Bernard held positions at the University of Michigan and Michigan State University before moving to Iowa State University as Professor and Chairman of Mechanical Engineering in 1983. He received B.S., M.S., and Ph.D. degrees in engineering mechanics from the University of Michigan.

Ann Bostrom is Associate Professor in the School of Public Policy at the Georgia Institute of Technology. During the period 1999–2001 she served as program director for the Decision, Risk, and Management Science program at the National Science Foundation. Her research interests include risk perception, communication and management, and cognitive aspects of survey methodology, with particular emphasis on how people understand and make decisions about risks. She served as a member of the National Research Council's Committee for Study of Consumer Automotive Safety Information, which produced *Special Report 248: Shopping for Safety: Providing Consumer Automotive Safety Information.* Dr. Bostrom is a member of the executive committee of the Board of Scientific Counselors for the Office of Research and Development of the U.S. Environmental Protection Agency and chair of the Risk Communications Specialty group in the international Society for Risk Analysis. She received a B.A. in English from the University of Washington, an M.B.A. from Western Washington University, and a Ph.D. in public policy analysis from Carnegie Mellon University.

Susan A. Ferguson is Senior Vice President, Research, at the Insurance Institute for Highway Safety. Since joining the Institute in 1991, she has been involved in a range of studies addressing driver, vehicle, and roadway issues, including alcohol-impaired driving, airbag performance, graduated licensing, and the meaning of vehicle safety to consumers. Dr. Ferguson chairs the Blue Ribbon Panel on Advanced Airbag Performance and is a member of several other professional committees, including the Advisory Board of the Harvard Center for Risk Analysis and the Advisory Board of the Children's Hospital of Philadelphia, Partners for Child Passenger Safety. She is also a member of the Transportation Research Board's committees on Alcohol, Other Drugs, and Transportation and on Women and Transportation. Dr. Ferguson received a B.A. in psychology from the Open University in England, and a Ph.D. in experimental psychology from The George Washington University.

B. John Garrick [NAE], independent consultant, was a cofounder of PLG, Inc., an international engineering, applied science, and management consulting firm formerly in Newport Beach, California. He retired as the company's president and chief executive officer in 1997. His professional interests involve risk assessment in fields such as nuclear energy, space and defense, chemicals and petroleum, and transportation. He is a past president of the international Society for Risk Analysis. Dr. Garrick is a fellow of three professional societies and has received many awards, including the Distinguished Achievement

Award from the Society for Risk Analysis. He was appointed to the U.S. Nuclear Regulatory Commission's Advisory Committee on Nuclear Waste in 1994, and now serves as chairman. He has served on and chaired several committees of the National Research Council. Dr. Garrick was elected to the National Academy of Engineering in 1993 and is a registered professional engineer in the state of California. He received a B.S. in physics from Brigham Young University and M.S. and Ph.D. degrees in engineering and applied science from the University of California, Los Angeles. He is a graduate of the Oak Ridge School of Reactor Technology.

Paul A. Green is Senior Research Scientist in the Human Factors Division of the University of Michigan Transportation Research Institute, where he leads the Driver Interface Group. He is also Adjunct Associate Professor in the Industrial and Operations Engineering and the Mechanical Engineering departments of the University of Michigan. Dr. Green conducts research on human factors and ergonomics issues pertaining to driver interaction with future automotive information systems, as well as basic investigations of how people drive, driver workload, and driver eye fixations. He is a member of the Society of Automotive Engineers' Safety and Human Factors Committee. His awards include the National Safety Council's Howard Pyle Fellowship for Safety Research and two oral presentation awards from the Society of Automotive Engineers. Dr. Green received a B.S. in mechanical engineering from Drexel University, followed by an M.S.E. in industrial and operations engineering, an M.A. in psychology, and a Ph.D. in industrial and operations engineering and psychology, all from the University of Michigan.

David L. Harkey is Manager of Engineering Studies at the University of North Carolina Highway Safety Research Center. His research interests include highway safety, roadway geometrics and design, roadside safety, and traffic operations. He recently completed a study for the Federal Highway Administration on the causes of, and potential countermeasures for, motor vehicle rollover collisions. He is currently participating in the Highway Safety Information System project, for which he is conducting multiple crash analyses, developing a geographic information system–based program for highway safety analysis, and evaluating automated data collection systems. Mr. Harkey has taught more than 20 workshops on the application of the *Older Driver Highway Design Handbook,* which addresses changes in the driving environment to enhance the safety and mobility of older drivers and pedestrians. Mr. Harkey received a B.S. in civil engineering and an M.S. in transportation engineering, both from the University of North Carolina at Charlotte.

J. Karl Hedrick is James Marshall Wells Professor and Chairman of Mechanical Engineering at the University of California, Berkeley. He is also the Director of the University of California Partners for Advanced Transit and

Highways Research Center. Before moving to Berkeley, Dr. Hedrick was Professor of Mechanical Engineering at the Massachusetts Institute of Technology, where he was Director of the Vehicle Dynamics Laboratory. His research addresses the development of advanced control theory and its application to a broad variety of transportation systems, including automated highway systems, collision warning systems, collision avoidance systems, and adaptive cruise control. He is Vice President and a member of the Board of Directors of the International Association of Vehicle System Dynamics, and editor of the *Vehicle Systems Dynamics Journal*. Dr. Hedrick received a B.S. in engineering mechanics from the University of Michigan, and M.S. and Ph.D. degrees in aerospace and astronautics engineering from Stanford University.

David C. Holloway is Professor of Mechanical Engineering at the University of Maryland and Director of the Center of Graduate Automotive Technology Education. He is responsible for courses in vehicle dynamics and hybrid electric vehicles, and he has worked with student teams in building different cars to participate in national competitions, including the Methanol Marathon (1989–1990), the Grand Solar Challenge (1992), Sunrayce (1993 and 1995), and the Future Car Challenge (1996–1999). Dr. Holloway's research interests include advanced automotive propulsion systems, hybrid electric vehicles, vehicle simulation, and tire technology, and he has conducted work on the vehicle dynamics of all-terrain vehicles under the sponsorship of the U.S. Consumer Product Safety Commission. In 1997, he served as President of the Society of Automotive Engineers. Dr. Holloway received B.S., M.S., and Ph.D. degrees from the University of Illinois, Department of Theoretical and Applied Mechanics.

L. Daniel Metz is President of Metz Engineering and Racing and Professor Emeritus in the Department of General Engineering at the University of Illinois, Urbana–Champaign. His research interests include simulation of driver–automobile dynamic behavior, human control performance, and vehicle dynamics and aerodynamics. Dr. Metz' many publications include several articles on motor vehicle rollover. He has been a technical consultant in accident analysis and reconstruction and in vehicle dynamics for more than 30 years, and was chief vehicle dynamics consultant for the design of the U.S. Grand Prix Indianapolis Motor Speedway Formula One course. Dr. Metz teaches nationally recognized seminars in automobile vehicle dynamics under the sponsorship of the Society of Automotive Engineers. He spent almost 30 years as a faculty member at the University of Illinois, Urbana–Champaign, during which time he received several awards for teaching excellence. Dr. Metz received a B.S. from the University of Cincinnati, an M.S. from the University of Detroit, and a Ph.D. from Cornell University, all in mechanical engineering.

N. Eugene Savin is Professor in the Department of Economics at the University of Iowa, a position he has held since 1986. He previously held a variety of academic teaching positions in the United States and Europe, including Lecturer and Reader at the University of Cambridge, England. His fields of specialization include economic statistics, econometrics, general economic theory, and economic history. He has published extensively in a wide range of peer-reviewed journals and has authored chapters of several books. Dr. Savin served for 10 years as Associate Editor of the *Journal of Econometrics,* and he has taught seminars on econometrics in the United States and overseas. His academic awards and distinctions include Fellow of the Econometric Society (1985) and a Teaching Excellence Award from the University of Iowa in 1990. Dr. Savin received a B.A. in economics, an M.A. in statistics, and a Ph.D. in economics, all from the University of California, Berkeley.

Kimberly M. Thompson is Assistant Professor of Risk Analysis and Decision Science at Harvard University, School of Public Health. Her research interests and teaching focus on issues related to developing and applying quantitative methods for risk assessment and risk management, and on consideration of the public policy implications associated with including uncertainty and variability in risk characterization. Dr. Thompson has also investigated the characterization of information and communication of risks, and she recently developed a guide to help consumers take charge of health information. She is a member of the International Society of Exposure Analysis, the Risk Assessment and Policy Association, and the Society for Risk Analysis. Dr. Thompson received a B.S. in chemical engineering and an M.S. in chemical engineering practice from the Massachusetts Institute of Technology, and an Sc.D. in environmental health from Harvard University.